WISHA Poster

WAC 296-800-200

Rule

YOUR RESPONSIBILITY:

To post the WISHA poster, which informs your employees of their job safety and health protection rights

WAC 296-800-20005

Post and keep a WISHA poster in your workplace

You must:

- Post it where it can easily be seen by employees and keep it in good condition.

Note:

- Other programs within Labor and Industries may require other workplace posters. These are:
  - Job safety and health protection

    AND
  - Notice to employees -- If a job injury occurs

    AND
  - Your rights as a nonagricultural worker
- You can obtain a free copy of Labor and Industries posters from any Labor and Industries office or by printing it off our website (http://www.lni.wa.gov/ipub/101-054-000.htm). You can find the Labor and Industries office closest to you by:
- Checking the Resource Section of this book for regional offices.

  OR
  - Calling 1-800-4BE SAFE (1-800-423-7233)

    OR
  - http://www.lni.wa.gov/wisha/question.htm#contact

Notes

YOUR RESPONSIBILITY:

To provide and maintain adequate lighting in your workplace

WAC 296-800-21005

Provide and maintain adequate lighting

Note:

This section establishes minimal levels of lighting for safety purposes only. Guidelines pertaining to optimal levels of lighting and illumination may be found in Practice for Industrial Lighting, ANSI/IES RP7-1979. (See the Resource Section of this book on how to contact ANSI.)

You must

- Provide and maintain adequate lighting for all work activities in your workplace. See the following table:

Lighting Table		
Activity	**Minimum acceptable average lighting level in an area: (Foot-candles)**	**Any one single measurement used to determine the average lighting level* can't be less than: (Foot-candles)**
Indoor task	10	5
Outdoor task	5	2.5
Nontask activities for both indoor and outdoor	3	1.5

* Lighting levels must be measured at 30 inches above the floor/working surface at the task.

You must

- Have adequate light for employees to see nearby objects that might be potential hazards or to see to operate emergency controls or other equipment, if general lighting isn't available.

-Continued-

Rule

WAC 296-800-21005 (Continued)

Note:

- Lighting levels can be measured with a light meter.
- Conversion information: 1 foot-candle =1 lumen incident per square foot =10.76 lux.

Housekeeping, Drainage, & Storage

WAC 296-800-220

Summary

YOUR RESPONSIBILITY:

To provide your employees with a clean, dry, pest-free workplace

Note:

The introduction has important information about building, electrical and fire codes that may apply to you in addition to WISHA rules. See "How do the WISHA rules relate to building, fire, and electrical codes" in the introduction section of this book.

You must

Housekeeping

Keep your workplace clean
WAC 296-800-22005 ..... Page 220-3

Sweep and clean your workplace to minimize dust
WAC 296-800-22010 ..... Page 220-3

Keep your workplace free of obstacles that interfere with cleaning
WAC 296-800-22015 ..... Page 220-3

Control pests in your workplace
WAC 296-800-22020 ..... Page 220-4

Make sure floors are maintained in a safe condition
WAC 296-800-22022 ..... Page 220-5

Drainage

Keep your workroom floors dry, when practical
WAC 296-800-22025 ..... Page 220-5

Provide proper drainage
WAC 296-800-22030 ..... Page 220-6

-Continued-

Summary

WAC 296-800-220 (Continued)
Storage

Store things safely
WAC 296-800-22035 ..... Page 220-6

Control vegetation in your storage areas
WAC 296-800-22040 ..... Page 220-7

HOUSEKEEPING

WAC 296-800-22005
Keep your workplace clean

You must

- Keep all areas of your workplace, passageways, storage rooms, and service rooms in a clean, orderly and sanitary condition to the extent the nature of the work allows.

WAC 296-800-22010
Sweep and clean your workplace to minimize dust

You must

- Sweep and clean your workplace in a way that minimizes dust in the air as much as possible.
- When practical, clean after hours so that your employees aren't exposed to dust in the air on the job.

WAC 296-800-22015
Keep your workplace free of obstacles that interfere with cleaning

You must

- Keep your workplace clear of obstructions such as nails, splinters, loose boards and unnecessary holes and openings to make cleaning easier and more effective.

Rule

WAC 296-800-22020

Control pests in your workplace

You must

- Make sure each building in your workplace is constructed, equipped and maintained so it restricts pests from entering or living in it. Pests include animals such as:
  - Rodents (rats, mice, and squirrels).
  - Birds (starlings, pigeons, and swallows).
  - Insects (bees, wasps, and mosquitoes).
- Take steps to effectively control pests in your workplace, if they are detected.
  - Carry out a continuing and effective control program in the areas of your workplace where pests have been detected.

Note:

- By handling dead or live pests including their waste products, attached parasites and other contaminated materials, your employees may be exposed to certain health risks. These risks include, but aren't limited to: Hanta virus, rabies, lyme disease and psittacosis. Contact your local L&I office (see Resource Section of this book) or the public health department for more information about health risks and proper pest handling and disposal techniques.
- "Workplace" includes storage areas.

WAC 296-800-22022

Make sure floors are maintained in a safe condition

You must

- Make sure floors are kept free of debris. This includes:
  - Buildings
  - Platforms
  - Walkways and driveways
  - Storage yards
  - Docks
- Use a nonslip coating on all polished floors.

DRAINAGE

WAC 296-800-22025

Keep your workroom floors dry, when practical

You must

- Do the following to help keep your employees dry if wet processes are used in your work area:
  - Maintain drainage away from the work area;

    AND
  - Provide false floors, platforms, or other dry places where employees can stand, where practical

    OR
  - Provide appropriate waterproof footgear.

Rule

WAC 296-800-22030
Provide proper drainage

You must

- Provide all areas where employees work, such as yards, basements, or garages, with adequate drainage.

STORAGE

WAC 296-800-22035
Store things safely

You must:

- Store materials so they don't create a hazard.
- Keep workplace storage areas free from accumulation of materials that could create hazards from tripping, fire, or explosion.
- Secure stored items such as bundles, containers, and bags to prevent them from falling, sliding, or collapsing by doing one or more of the following:
  - Stacking
  - Racking
  - Blocking
  - Interlocking
  - Otherwise securing them

-Continued-

WAC 296-800-22035 (Continued)

- Make sure stored items are limited in height so that they are stable and secure to prevent sliding or collapse.

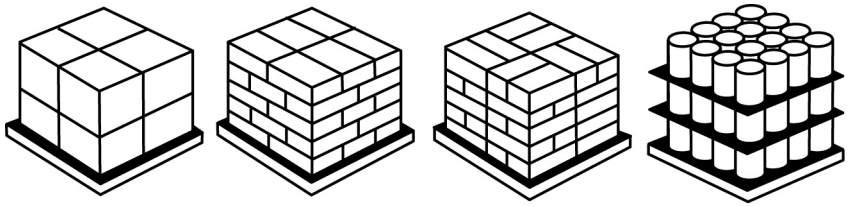

Block Pattern Brick Pinwheel Rigid Spacer

WAC 296-800-22040

Control vegetation in your storage areas

You must

- Control vegetation in your storage areas when necessary to create a safe working environment.

Notes

Drinking Water, Bathrooms, Washing Facilities,& Waste Disposal

WAC 296-800-230

Summary

YOUR RESPONSIBILITY:

To provide safe drinking (potable) water, bathrooms, washing facilities, eating areas and garbage and waste disposal in your workplace

You must

GENERAL REQUIREMENTS FOR ALL WORKPLACES

DRINKING WATER

Provide safe drinking (potable) water in your workplace
WAC 296-800-23005 ..... Page 230-4

Clearly mark water outlets that are not-fit-for-drinking (non-potable)
WAC 296-800-23010 ..... Page 230-5

Make sure that systems delivering the not-fit-for-drinking (non-potable) water prevent backflow into drinking water systems
WAC 296-800-23015 ..... Page 230-7

BATHROOMS AND WASHING FACILITIES

Provide bathrooms for your employees
WAC 296-800-23020 ..... Page 230-7

Provide convenient, and clean washing facilities
WAC 296-800-23025 ..... Page 230-9

-Continued-

Drinking Water, Bathrooms, Washing Facilities,& Waste Disposal

WAC 296-800-230

Summary

WAC 296-800-230 (Continued)

EATING AREAS AND FOOD SERVICES

Make sure eating areas are safe and healthy
WAC 296-800-23040 ..... Page 230-9

Follow these requirements if you provide food service to your employees
WAC 296-800-23045 ..... Page 230-10

GARBAGE AND WASTE DISPOSAL

Dispose of garbage and waste safely
WAC 296-800-23050 ..... Page 230-10

Remove garbage and waste in a way that doesn't create a health hazard
WAC 296-800-23055 ..... Page 230-11

LUNCHROOMS AND PERSONAL SERVICE ROOMS

Provide a separate lunchroom if employees are exposed to toxic substances if they are allowed to eat and drink on the job site
WAC 296-800-23060 ..... Page 230-11

Provide showers when required for employees working with chemicals
WAC 296-800-23065 ..... Page 230-12

Provide change rooms when required
WAC 296-800-23070 ..... Page 230-13

Make sure any work clothes you provide are dry
WAC 296-800-23075 ..... Page 230-13

-Continued-

WAC 296-800-230 (Continued)

Note:

Some industries may have additional rules on bathrooms and washing facilities. Some examples include:

Industry	WAC
Agriculture; Indoor Sanitation and Temporary Labor Camps	Chapter 296-307 WAC
Carcinogens; General Regulated Area Requirements	WAC 296-62-07308
Charter Boats	WAC 296-115-050
Compressed Air Work	WAC 296-36-160(5)
Construction	WAC 296-155-140
Temporary Labor Camps	WAC 296-24-12507

Drinking Water, Bathrooms, Washing Facilities,& Waste Disposal

WAC 296-800-230

Rule

DRINKING WATER
WAC 296-800-23005

Provide safe drinking (potable) water in your workplace

You must

(1) Provide safe drinking (potable) water for employees for:

- Washing themselves.
- Personal service rooms.
- Cooking.
- Washing premises where food is prepared or processed.
- Washing food, eating utensils, or clothing.

(2) Make sure when providing movable or portable drinking water dispensers that they are:

- Capable of being closed.
- Kept in sanitary condition.
- Equipped with a tap.

(3) Prohibit employees from:

- Using shared drinking cups or utensils.
- Using open containers such as barrels, pails, and tanks that require employees to dip or pour drinking water, even if the containers have covers.

-Continued-

Drinking Water, Bathrooms, Washing Facilities,& Waste Disposal

WAC 296-800-230

Rule

WAC 296-800-23005 (Continued)

Definition:

- Potable water is water that you can safely drink that meets specific safety standards prescribed by the United States Environmental Protection Agency's *National Interim Primary Drinking Water Regulations*, published in 40 CFR Part 141, and 40 CFR 147.2400.
- Personal service rooms are used for activities not directly connected with a business'production or service function such as first aid, medical services, dressing, showering, bathrooms, washing and eating.

WAC 296-800-23010

Clearly mark the water outlets that are not-fit-for-drinking (non-potable)

You must

(1) Mark water outlets that aren't fit for drinking (nonpotable), such as those used for industrial processes or firefighting, so they won't be used for:

- Drinking
- Washing themselves, except in emergencies
- Cooking
- Washing food, eating utensils, or clothing.

(2) Prohibit the use of nonpotable water containing substances that could create unsafe conditions such as:

- Concentrations of chemicals, such as lead or chlorine
- Fecal coliform bacteria.

-Continued-

Drinking Water, Bathrooms, Washing Facilities,& Waste Disposal

WAC 296-800-230

Rule

WAC 296-800-23010 (Continued)

Note:

As long as the nonpotable water is free of substances that could create unsafe conditions, the water can be used for cleaning both:

- Work premises used for activities other than food preparation or processing.

  AND

- Personal service rooms, such as bathrooms.

Reference:

You may need to follow additional requirements for emergency washing facilities. See WAC 296-800-150, First Aid for more information.

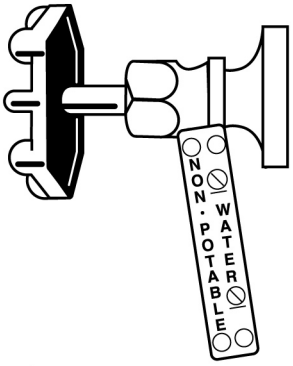

Outlets for water not fit to drink must be marked.

Drinking Water, Bathrooms, Washing Facilities,& Waste Disposal

WAC 296-800-230

Rule

WAC 296-800-23015

Make sure that systems delivering not-fit-for-drinking (nonpotable) water prevent backflow into drinking water systems

You must

- Make sure that systems delivering not-fit-for-drinking (nonpotable) water prevent backflow into drinking water systems.

BATHROOMS AND WASHING FACILITIES
WAC 296-800-23020

Provide bathrooms for your employees

Exemption:

You don't have to provide bathrooms:

- For mobile crews or at work locations not normally attended by employees, if there is transportation immediately available to nearby bathrooms that meet the requirements of this section.

You must

(1) Provide bathrooms with the appropriate number of toilets for your employees at every workplace based on Table 1.

- Have the appropriate number of toilets for each gender, based on the number of male and female employees at your workplace.
  - For example, if you have 37 men and 17 women, you need to have 3 toilets for the men and 2 toilets for the women, based on Table 1.
- Make sure each toilet is in a separate compartment with a door and walls or partitions for privacy.

-Continued-

Drinking Water, Bathrooms, Washing Facilities,& Waste Disposal

WAC 296-800-230

Rule

WAC 296-800-23020 (Continued)

Table 1
Required Number of Employee Toilets at Every Workplace

Maximum Number of Employees Present at Any One Time During a Shift	Minimum Number of Toilets Required
1 to 15	1
16 to 35	2
36 to 55	3
56 to 80	4
81 to 110	5
111 to 150	6
Over 150	One additional toilet for each additional 40 employees

Note:

A shared bathroom (multipple toilets without enclosures) counts as one toilet no matter how many toilets it contains. In bathrooms used only by men, urinals may be substituted for up to 1/3 of the required toilets.

You must

(2) Provide toilet paper and a toilet paper roll holder for each toilet.

(3) Make sure bathrooms are maintained in a clean and sanitary condition.

(4) Make sure the sewage disposal method doesn't endanger the health of employees.

Exemption:

Separate bathrooms for men and women aren't required if the bathroom:

- Will only be occupied by one person at a time.
- Can be locked from the inside.
- Contains at least one toilet.

Drinking Water, Bathrooms, Washing Facilities,& Waste Disposal

WAC 296-800-230

Rule

WAC 296-800-23025

Provide convenient, and clean washing facilities

Exemption:

You do **not** have to provide washing facilities for:

- Mobile crews, or work locations not normally attended by employees, if there is immediately available transportation to nearby washing facilities that meet the requirements of this rule.

You must

- Provide convenient and clean washing facilities for employees including:
  - Sinks or basins for personal washing.
  - Hot and cold water, or lukewarm (tepid), running water in each sink and basin.
  - Hand soap or similar cleaning agents.
  - One of the following:
    - Individual paper or cloth hand towels
    - Individual sections of clean continuous cloth toweling
    - Warm air blowers for drying hands, located near the sinks and basins.

EATING AREAS AND FOOD SERVICE
WAC 296-800-23040

Make sure eating areas are safe and healthy

You must

(1) Make sure employees aren't allowed to eat and drink in:

- Bathrooms
- Area exposed to toxic substances

(2) Make sure food isn't stored in bathrooms or areas exposed to toxic substances.

Drinking Water, Bathrooms, Washing Facilities,& Waste Disposal

WAC 296-800-230

Rule

WAC 296-800-23045

Follow these requirements if you provide food service to your employees

You must

- Make sure all food service facilities and operations you make available follow sound hygiene principles.
- Make sure the food is:
  - Unspoiled.
  - Protected from contamination during processing, preparation, handling, and storage.

GARBAGE AND WASTE DISPOSAL
WAC 296-800-23050

Dispose of garbage and waste safely

You must

(1) Make sure garbage containers are:

- Kept in clean and sanitary condition.
- Made from smooth, corrosion resistant materials.
- Easily cleaned or are disposable.
- Equipped with a solid tight-fitting cover unless you can keep them in a sanitary condition without a cover.

(2) Provide enough garbage containers to make sure they:

- Are conveniently located to encourage their use.
- Won't be overfilled.

Drinking Water, Bathrooms, Washing Facilities,& Waste Disposal

WAC 296-800-230

Rule

WAC 296-800-23055

Remove garbage and waste in a way that doesn't create a health hazard

You must

- Remove all sweepings, solid and liquid wastes, refuse, and garbage as often as needed to keep the workplace in a sanitary condition.

LUNCHROOMS AND PERSONAL SERVICE ROOMS
WAC 296-800-23060

Provide a separate lunchroom if employees are exposed to toxic substances if they are allowed to eat and drink on the job site

You must

(1) Provide a lunchroom separate from the work are if employees are exposed to toxic substances.

(2) Use Table 2 to determine the required square footage in your lunchroom based on the number of employees using the room at any one time.

Table 2
Maximum Number of Employees
Using Lunchroom at One Time

Number of persons	Square Feet per Person
25 and less	13
26-74	12
75-149	11
150 and over	10

Note:

You don't have to provide a separate lunchroom if it's convenient for employees to leave the workplace to eat and drink.

Drinking Water, Bathrooms, Washing Facilities,& Waste Disposal

WAC 296-800-230

Rule

WAC 296-800-23065

Provide showers when required for employees working with chemicals

You must

- Provide showers for employees if:
  - They work with chemicals that could cause an occupational illness;

    AND
  - The chemicals remain on the skin between work shifts.
- Make sure employees who work with such chemicals shower at the end of their shifts.
  - Make sure showers have:
    - Soap or other cleansing agents
    - Hot and cold water with a common discharge line.
  - Provide individual, clean towels for each employee who is required to shower.
    - Provide at least one shower for every 10 employees (or every fraction of 10) of each gender.

Note:

Table 3 shows the number of showers to provide based on a "Fraction of 10."

Table 3

Number of Employees of Each Gender	Number of showers
1-10	1
11-20	2
21-30	3
31-40	4
41-50	5

Drinking Water, Bathrooms, Washing Facilities,& Waste Disposal

WAC 296-800-230

Rule

WAC 296-800-23070

Provide change rooms when required

You must

- Provide change rooms when employees are required by a particular standard to wear protective clothing because of the possibility of contamination with toxic materials.
- Make sure change rooms have separate storage facilities for street clothes and protective clothing.

WAC 296-800-23075

Make sure any work clothes you provide are dry

You must

- Make sure when providing work clothes to employees that the clothing provided is dry if the clothing:
  - Gets wet during use;

    OR
  - Is washed before it is reused.

Notes

Environmental Tobacco Smoke

WAC 296-800-240

Summary

YOUR RESPONSIBILITY:

To control exposure to environmental tobacco smoke in your office work environment

You must

Control tobacco smoke in your building
WAC 296-800-24005 ..... Page 240-2

Control tobacco smoke that comes in from the outside
WAC 296-800-24010 ..... Page 240-4

Note:

This rule doesn't preempt any federal, state, municipal, or other local authority's regulation of indoor smoking that is more protective than this section.

Definition:

Office work environment is an indoor or enclosed occupied space where clerical work, administration, or business is carried out. In addition, it includes:

- Other workplace spaces controlled by the employer and used by office workers, such as cafeterias, meeting rooms, and washrooms.
- Office areas of manufacturing and production facilities, not including process areas.
- Office areas of businesses such as food and beverage establishments, agricultural operations, construction, commercial trade, services, etc.

Environmental Tobacco Smoke

WAC 296-800-240

Rule

WAC 296-800-24005

Control tobacco smoke in your building

Exemption:

The minimum criteria specified in this rule don't apply to outdoor structures provided for smokers such as gazebos or lean-tos.

You must

- Prohibit *smoking* in your office work environment

  OR

- Restrict smoking inside your office work environment to designated enclosed smoking rooms that meet the following minimum criteria:
  - Identify smoking rooms clearly with signs.
  - Make sure the designated smoking rooms aren't in common areas, such as:
    - Places where nonsmoking employees are required to work or visit.
    - Restrooms
    - Washrooms
    - Hallways
    - Stairways
    - Cafeterias/lunchrooms
    - Meeting rooms.
  - Make sure that no employee is required to enter a designated smoking room while someone is smoking there.
  - Conduct cleaning and maintenance work in designated smoking rooms when smokers aren't present.

-Continued-

WAC 296-800-24005 (Continued)

You must

- Ventilate designated smoking rooms at a rate of at least 60 cubic feet per minute per smoker (calculated on the basis of the maximum number of smokers expected during the course of a normal working day), which can be supplied by transfer air from adjacent areas.
  - Maintain enough negative air pressure in designated smoking areas to prevent smoke from migrating into nonsmoking areas, at all times.
  - Operate a separate mechanical exhaust system in designated smoking rooms, to make sure exhausted air moves directly outside, and doesn't recirculate into nonsmoking areas.
  - Prohibit use of the designated smoking room if the mechanical exhaust system isn't working properly, until repairs are completed.

Note:

This ventilation rate is recommended for occupancies of no more than 7 people for every 100 square feet of net occupied space in the designated smoking room.

Environmental Tobacco Smoke

WAC 296-800-240

Rule

WAC 296-800-24010

Control tobacco smoke that comes in from the outside

You must

- Use engineering or administrative controls to minimize the amount of tobacco smoke that comes into your office(s) from outside the building.
  - Make sure that outside smoking areas used by your employees aren't close to doorways, air intakes, and other openings that may allow airflow directly into an office.

Note:

- Administrative controls change the way workers do their job, reducing work exposure to potential hazards. This includes such things as:
  - Job rotation.
  - Wetting down dusty areas.
  - Having employees shower after exposure to potentially harmful substances.
  - Maintaining equipment properly.
  - Cleaning up work areas to control the effect of potential hazards.
- Engineering controls let you plan or physically change the machinery or work environment to prevent employee exposure to potential hazards. This includes any modification of plant equipment, processes, or materials to reduce employees' exposure to toxic materials or harmful physical agents.

Stairs & Stair Railings

WAC 296-800-250

Summary

YOUR RESPONSIBILITY:

To make sure stairs used by employees are safe

You must

Provide fixed stairs where required
WAC 296-800-25005 ..... Page 250-2

Provide stairs that minimize hazards
WAC 296-800-25010 ..... Page 250-4

Provide handrails and stair railings
WAC 296-800-25015 ..... Page 250-4

Exemptions:

This rule does **not** apply to:

- Stairs used exclusively for fire exit purposes.
- Construction operations (See WAC 296-24-06503 for the specifications for the safe design and construction of fixed general industrial stairs).
- Private buildings or residences.
- Articulated stairs (for example, stairs used at a marina).
- Nonindustrial and monumental stairs are excluded as they aren't industrial stairs; however, when public and private building steps are located at loading or receiving docks, in maintenance areas, etc., or are used exclusively by employees, the requirements of this rule must apply.

Note:

The introduction has important information about building, electrical and fire codes that may apply to you in addition to WISHA rules. See “How do the WISHA rules relate to building, fire, and electrical codes” in the Introduction Section of this book.

Stairs & Stair Railings

WAC 296-800-250

Rule

WAC 296-800-25005

Provide fixed stairs where required

You must

- Install fixed stairs where:
  - Employees travel between different levels on a predictable and regular basis.
  - Access to platforms is required to give routine attention to equipment under operation.
  - Daily movement between elevations is required to gauge, inspect, and maintain equipment where those work assignments may expose employees to acids, caustics, gases, or other harmful substances.
  - Carrying tools or equipment by hand is a normal work requirement.
- Not use spiral stairways except as secondary exit routes.

Note:

- You can use fixed ladders for climbing elevated structures, such as tanks, towers, and overhead traveling cranes, when their use is common practice in your industry.
- You can use winding stairways on tanks and similar round structures if the structure's diameter is at least 5 feet.
- You could use a spiral stairway as an exit route in a restricted area that lacks room for a conventional stairway.

-Continued-

WAC 296-800-25005 (Continued)

Definitions:

- A stairway or fixed stairs is a series of steps and landings:
  - Leading from one level or floor to another
  - Leading to platforms, pits, boiler rooms, crossovers, or around machinery, tanks, and other equipment
  - Used more or less continuously or routinely by employees or only occasionally by specific individuals
  - With 3 or more risers.
- A riser is the vertical part of the step at the back of a tread that rises to the front of the tread above.
- A tread is the horizontal part of the step. Tread width is the distance from the front of the tread to the back.

Stair Components

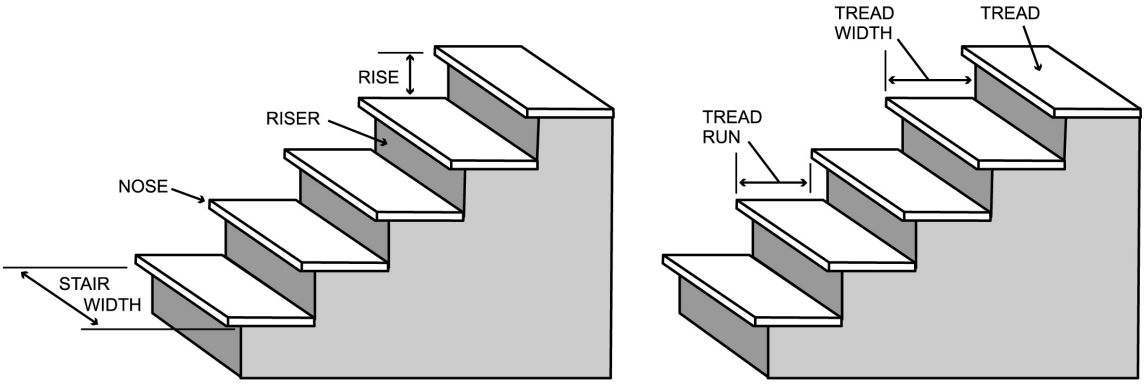

Stair railing is removed to show detail.

Stairs & Stair Railings

WAC 296-800-250

Rule

WAC 296-800-25010

Provide stairs that minimize hazards

You must

(1) Make sure stairs have slip-resistant treads.

(2) Make sure that stairs with four or more risers have:

- Railings on the open sides of all exposed stairways and stair platforms
- Handrails on at least one side of closed stairways, preferably on the right side while descending.

(3) Provide a platform where doors or gates open directly on a stairway. The swing of the door must not reduce the effective width of the platform to less than 20 inches.

Note:

To see all of the rules for building fixed stairs, refer to WAC 296-24-75011 and 296-24-765 of the General Safety and Health Standard.

WAC 296-800-25015

Provide handrails and stair railings

Exemption:

Vehicle service pit stairways are exempt from the rules for stairway railing and guards, if they would prevent a vehicle from moving into a position over the pit.

Definition:

- A handrail is a single bar or pipe on brackets from a wall or partition to provide a continuous handhold for persons using a stair.
- A stair railing is a vertical barrier attached to a stairway with an open side, to prevent falls. The top surface of the stair railing is used as a handrail.

-Continued-

WAC 296-800-25015 (Continued)

You must

- Make sure stairways less than 44 inches wide have:
  - At least one handrail, preferably on your right side as you go down the stairs, if both sides are enclosed.

    OR
  - At least one stair railing on the open side, if one side is open.

    OR
  - One stair railing on each side, if both sides are open.
- Make sure stairways more than 44 inches wide but less than 88 inches wide have:
  - One handrail on each enclosed side.
  - One stair railing on each open side.
- Make sure stairways at least 88 inches wide have:
  - One handrail on each enclosed side.
  - One stair railing on each open side.
  - One intermediate stair railing located approximately midway of the width.
- Equip winding stairs with a handrail, offset to prevent walking on all portions of the treads, less than 6 inches wide.

Reference:

Railings must consist of a top rail, intermediate rail, and posts. To see all of the rules for building handrails and stairway railings, refer to WAC 296-24-75011 of the General Safety and Health Standard.

Notes

Floor Openings, Floor Holes, & Open-Sided Floors

WAC 296-800-260

Summary

YOUR RESPONSIBILITY:

To safely guard floor openings, floor holes, and open-sided floors in your workplace

You must:

Guard or cover floor openings and floor holes
WAC 296-800-26005 ..... Page 260-2

Protect open-sided floors and platforms
WAC 296-800-26010 ..... Page 260-5

Floor Openings, Floor Holes, & Open-Sided Floors

WAC 296-800-260

Rule

WAC 296-800-26005

Guard or cover floor openings and floor holes

Definition:

- A floor opening is an opening in any floor, platform, pavement, or yard that measures at least 12 inches in its smallest dimension and through which a person can fall.

  Examples of floor openings are:

  - Hatchways
  - Stair or ladder openings
  - Pits
  - Large manholes

- The following are not considered floor openings:
  - Openings occupied by elevators
  - Dumbwaiters
  - Conveyors
  - Machinery
  - Containers

- A floor hole is an opening in any floor, platform, pavement, or yard that measures at least one inch but less than 12 inches at its smallest dimension and through which materials and tools (but not people) can fall.

  Examples of floor holes are:

  - Belt holes
  - Pipe openings
  - Slot openings

-Continued-

WAC 296-800-26005 (Continued)

You must

(1) Guard stairway floor openings, temporary floor openings and floor holes.

- Protect all stairway floor openings with a railing. The railing must protect all open sides except the stairway entrance side.

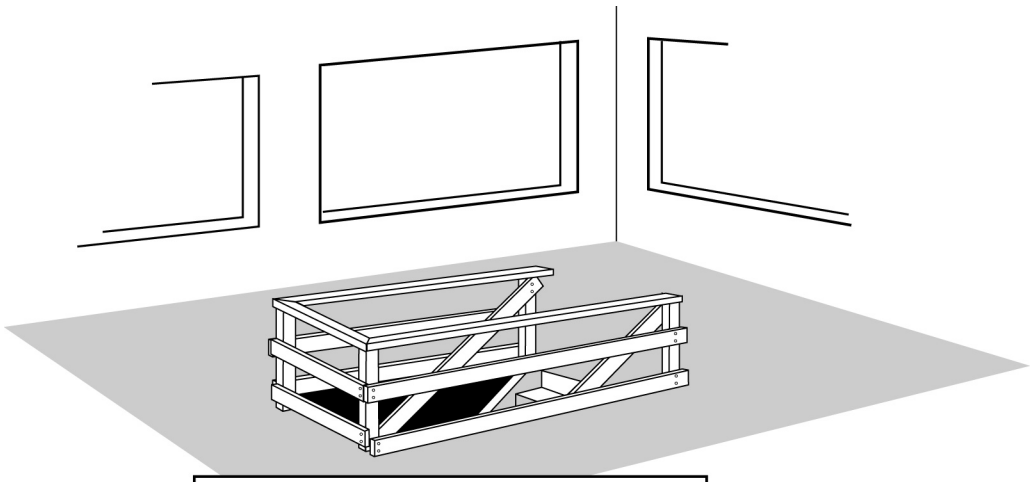

Guardrail installed around all sides of stairway opening except at the entrance.

- Use a hinged cover and a removable railing where traffic across an infrequently used stairway floor opening prevents the installation of a fixed railing. This removable railing must protect all open sides except the stairway entrance side.
- Protect temporary floor openings by either a railing or by a person who constantly attends the opening.

-Continued-

Floor Openings, Floor Holes, & Open-Sided Floors

WAC 296-800-260

Rule

WAC 296-800-26005 (Continued)

- Protect exposed floor holes into which a person can accidentally walk by either
  - A railing with a toeboard on all open sides.

    OR
  - A floor hole cover of standard strength and construction that can be hinged in place. When a floor hole cover isn't in place, the hole must be protected by a removable railing or constantly attended by someone.
- Provide covers for floor openings. Floor opening covers may be of any material that has a safety factor of 4, or is strong enough to hold up to 4 times the intended load. Covers that don't project more than one inch above the floor level may be used providing all edges are beveled (slanted) to prevent tripping. All hinges, handles, bolts, or other parts of a cover must set flush with the floor or cover surface.

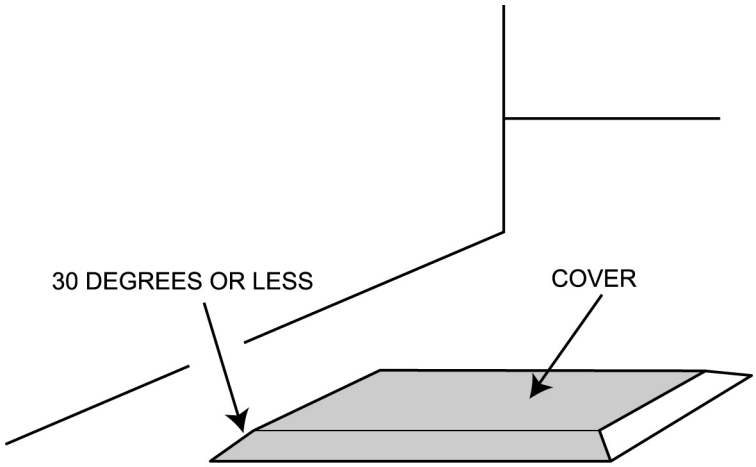

A cover that projects above the surface must be beveled to reduce the tripping hazard.

(2) Prevent tools and materials from falling through a floor hole. The floor hole must be protected by a cover that leaves an opening no more than one inch wide and is securely held in place. This applies only to floor holes that persons can't accidentally walk into on account of fixed machinery, equipment, or walls.

Floor Openings, Floor Holes, & Open-Sided Floors

WAC 296-800-260

Rule

WAC 296-800-26010

Protect open-sided floors and platforms

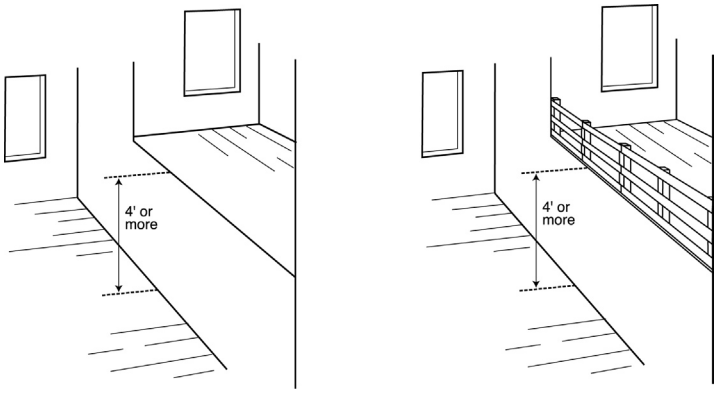

OPEN FLOOR (Unguarded) GUARDED FLOOR

You must

(1) Guard open-sided floors and platforms.

- Guard open-sided floors and platforms 4 feet or more above adjacent floor or ground level by a railing. The entrance to a ramp, stairway, or fixed ladder doesn't need a railing.
- Guard open-sided floors, walkways and platforms above or adjacent to dangerous equipment, pickling or galvanizing tanks, degreasing units, and other similar hazards, regardless of height with a railing and toeboard.

(2) Make sure tools and loose materials aren't left on overhead platforms and scaffolds.

Note:

- Where the guarding rules above don't apply because employees exposure to falls is infrequent (not on a predictable and regular basis), you must comply with the Personal Protective Equipment (PPE) rules (WAC 296-800-160) or other effective fall protection must be provided.
- You can find the minimum requirements for standard railings of various types of construction in WAC 296-24-75011.

Notes

Workplace Structural Integrity

WAC 296-800-270

Summary

YOUR RESPONSIBILITY:

To make sure that the buildings, floors, and other structures in your workplace are safe, well-built, and not overloaded

You must

Not overload floors or roofs
WAC 296-800-27005 ..... Page 270-2

Make sure that floors are safe
WAC 296-800-27010 ..... Page 270-2

Make sure floors can support equipment that moves or has motion
WAC 296-800-27015 ..... Page 270-3

Post approved load limits (weight limits) for floors
WAC 296-800-27020 ..... Page 270-3

Note:

The Introduction has important information about fire, building and electrical codes that may apply to you in addition to WISHA rules. See "How do the WISHA rules relate to fire, building and electrical codes" in the Introduction Section of this book.

Rule

WAC 296-800-27005

Not overload floors or roofs

You must

- Prohibit overloading roofs and floors of any building or other structure with more weight than is approved by the building official.

WAC 296-800-27010

Make sure that floors are safe

You must

- Make sure that floors including their parts and structural members are safe.
- Make sure floors are of substantial construction and kept in good repair. This includes floors of:
  - Buildings
  - Platforms
  - Walks and driveways
  - Storage yards
  - Docks.
- Make sure that structures are designed, constructed, and maintained to provide a safety factor of 4 times the imposed maximum strain.
  - If you notice bowing, cracking, or other indications of excessive strain on a structure, you must take action to make sure it is safe.

Note:

This rule applies to all buildings or those that have had complete or major changes or repairs built after 5/7/74.

Rule

WAC 296-800-27015

Make sure floors can support equipment that moves or has motion

You must

- Make sure flooring of buildings, ramps, docks, trestles and other fixed structures that supports equipment that moves or has motion such as vibration, must not be less than 2 1/2 inch material.

Note:

Where flooring is covered by steel floor plates, 2-inch material may be used.

WAC 296-800-27020

Post approved load limits (weight limits) for floors

You must

- Post approved load limits (weight limits) for floors used for mercantile, business, industrial or storage purposes in an obvious place.
- As the owner, or owner's agent, of a building (or other part of a workplace) post the load approved by the building official by:
  - Supplying and affixing a durable metal sign that is marked with the approved load.
  - Placing the metal sign in an obvious spot in the space to which it applies.
  - Replacing the metal sign if it is lost, defaced, damaged, or removed.

Note:

This rule applies to the floor that supports shelving, but not to the shelves themselves.

Notes

Basic Electrical

WAC 296-800-280

Summary

YOUR RESPONSIBILITY:

To protect your employees from hazards when working with electrical equipment, tools, and appliances

You must

Inspect all electrical equipment your employees use to make sure the equipment is safe
WAC 296-800-28005 ..... Page 280-4

Make sure all electrical equipment is used for its approved or listed purpose
WAC 296-800-28010 ..... Page 280-5

Make sure electrical equipment used or located in wet or damp locations is designed for such use
WAC 296-800-28015 ..... Page 280-6

Make sure electrical equipment that isn't marked by the manufacturer can't be used
WAC 296-800-28020 ..... Page 280-7

Identify disconnecting means
WAC 296-800-28022 ..... Page 280-8

Maintain electrical fittings, boxes, cabinets, and outlets in good condition
WAC 296-800-28025 ..... Page 280-9

Maintain all flexible cords and cables in good condition and use safely
WAC 296-800-28030 ..... Page 280-11

Guard electrical equipment to prevent your employees from electrical hazards
WAC 296-800-28035 ..... Page 280-16

-Continued-

Summary

WAC 296-800-280 (Continued)

Make sure electrical equipment is effectively grounded
WAC 296-800-28040 ..... Page 280-18

Make sure electrical equipment has overcurrent protection
WAC 296-800-28045 ..... Page 280-22

Exemptions:

- These rules apply to all electrical equipment used in the workplace, except for:
  - Electrical installations and equipment on ships, aircraft and all automotive vehicles other than mobile homes and recreational vehicles.
  - Electrical installations and equipment used to generate, transmit, transform or distribute power exclusively for operation of rolling stock.
  - Electrical installations used exclusively for signaling and communicating with rolling stock.
  - Installations underground in mines.
  - Installations of communication equipment located outdoors or inside buildings used and controlled exclusively by communication utilities.
  - Installations controlled and used exclusively by electric utilities for communication or metering.

  OR

For generating, controlling, transforming, transmitting and distributing electric energy in buildings used exclusively by the company located:

- Outdoors on property owned or leased by the utility;

  OR

- On public highways, streets and roads;

  OR

- Outdoors by established rights on private property.

-Continued-

WAC 296-800-280 (Continued)

Note:

- The introduction has important information about fire, building and electrical codes that may apply to you in addition to WISHA rules. See "How do the WISHA rules relate to fire, building and electrical codes" in the introduction section of this book.
- These rules guide how electrical equipment is used and maintained in your workplace. They shouldn't be used in place of your local electrical codes if you are installing electrical wiring, electrical circuits or electrical distribution equipment.
- This rule applies to 600 volts or less. Requirements for specific equipment or special installation are found in Chapter 296-24 WAC, Part L.

Rule

WAC 296-800-28005

Inspect all electrical equipment your employees use to make sure the equipment is safe

You must

- Inspect electrical equipment to make sure there are no recognized hazards likely to cause your employees' death or serious physical harm. Determine the safety of the equipment by using the following list:
  - Has been approved or listed by a recognized testing laboratory, such as Underwriters Laboratories (UL) or other approving agency.
  - Is approved, or listed as approved, for the purpose it is being used.
  - Has strong and durable guards providing adequate protection including parts designed to enclose and protect other equipment.
  - Is insulated.
  - Won't overheat under conditions of use.
  - Won't produce arcs during normal use.
  - Is classified by:
    - Type
    - Size
    - Voltage
    - Current capacity
    - Specific use
    - Other factors.

WAC 296-800-28010

Make sure all electrical equipment is used for its approved or listed purpose

Definitions:

- Electrical outlets are places on an electric circuit where power is supplied to equipment through receptacles, sockets and outlets for attachment plugs.
- Receptacles are outlets that accept a plug to supply electric power to equipment through a cord or cable.

You must

- Make sure electrical outlets are rated equal or greater to the electrical load supplied.
- Make sure the proper mating configuration exists when connecting the attachment plug to a receptacle.
- Make sure when electrical outlets, cord connectors, and receptacles are joined, they accept the attachment plug with the same voltage or current rating.

SOME COMMON ELECTRICAL OUTLET (RECEPTACLE) CONFIGURATIONS

	15 Ampere	20 Ampere	30 Ampere	50 Ampere
Two Pole 3 - Wire Grounding 125 Volt		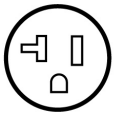	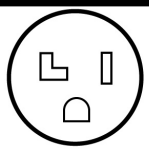	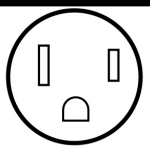
Three Pole 3 - Wire 125/250 Volt				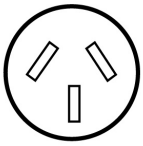

Note: A 20-ampere "T-solt" outlet or cord connector may accept a 15-ampere attachment plug of the same voltage rating.

Rule

WAC 296-800-28015

Make sure electrical equipment used or located in wet or damp locations is designed for such use

You must

- Make sure fixtures and receptacles located in wet or damp locations are approved for such use. They must be constructed or installed so that water can't enter or accumulate in wireways, lampholders, or other electrical parts.
- Make sure cabinets, fittings, boxes, and other enclosures in wet or damp locations are installed to prevent moisture or water from entering and accumulating inside.
  - In wet locations these enclosures must be weatherproof.
  - Switches, circuit breakers, and switchboards located in wet locations must be in weatherproof enclosures.

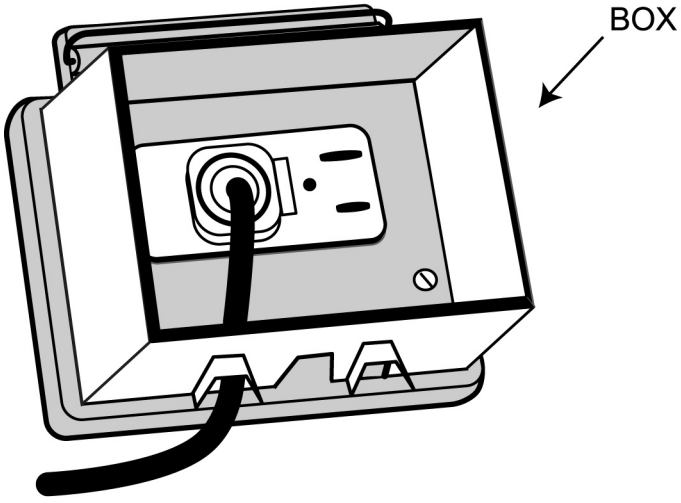

Electrical equipment used in wet locations must be weatherproof.

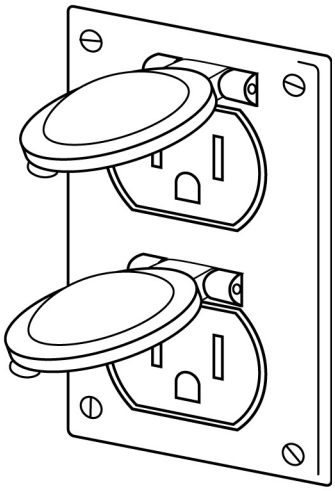

WAC 296-800-28020

Make sure electrical equipment that isn't marked by the manufacturer can't be used

You must

- Make sure markings are durable and appropriate to the environment.
- Appropriate markings include:
  - The manufacturer's name;

    OR
  - Trademark;

    OR
  - The organization responsible for the product;

    AND
  - Voltage, current and wattage, or other ratings as necessary.

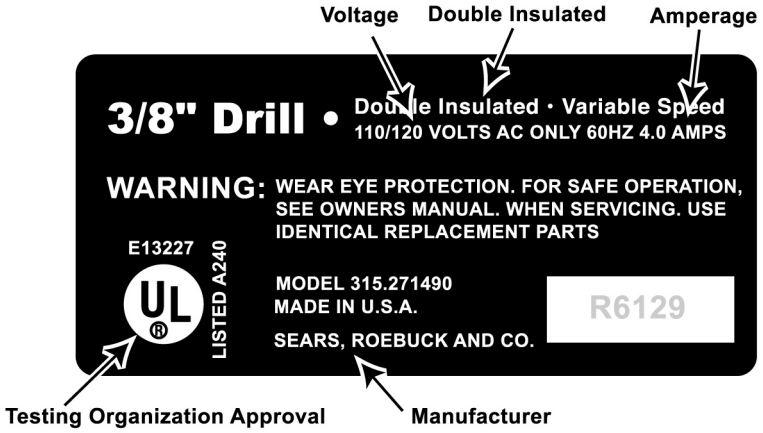

Electrical tools and equipment marked to show manufacturer, approvals and power requirements.

Rule

WAC 296-800-28022

Identify disconnecting means

You must

- Make sure the disconnect means (such as on/off switches and circuit breakers) is marked to show when it's open and closed and what equipment it controls, unless located and arranged so the purpose is obvious.
- Make sure each service, feeder and branch circuit is marked, at its disconnecting means or overcurrent device, to show when the circuit is open and closed and what circuit it controls, unless located and arranged so the purpose is obvious.
- Make sure markings are durable and appropriate to the environment.

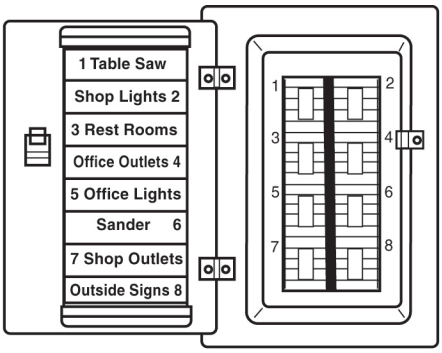

Electrical panel circuit breakers labeled to show the equipment or circuits they control.

WAC 296-800-28025

Maintain electrical fittings, boxes, cabinets and outlets in good condition

You must

(1) Do the following to covers and openings.

- Do the following when conductors enter boxes, cabinets, or fittings:
  - Protect the conductor (wires) from abrasion.
  - Effectively close the openings where conductors enter.
  - Effectively close all unused openings.
- Provide pull boxes, junction boxes, and fittings with covers approved for the purpose.
- Make sure each outlet box has a cover, faceplate, or fixture canopy in completed installations.
- Make sure covers for outlet boxes with openings for flexible cord pendants have bushings to protect the cord, or have a smooth and well rounded surface where the cord touches the opening.
- Ground metal covers.

(2) Make sure the area in front of electrical panels, circuit breaker boxes and similar equipment which operates at 600 volts or less:

- Has sufficient working area at least 30 inches wide for operation and maintenance of the equipment.
- Is kept clear and free of stored materials so that employees can access this equipment for servicing, adjustments or maintenance.
- Has at least one access route to provide free and unobstructed access.
- Has at least 3 feet of working space in front, measured from the exposed live parts or the enclosure front (See the work clearance table on the following page).
- Has adequate indoor lighting (WAC 296-800-210).
- Has at least 6 feet 3 inches of headroom.

-Continued-

Rule

WAC 296-800-28025 (Continued)

This table shows the area you must keep clear depending on the layout of the electrical equipment.

Conditions*	0 - 150 Volts to ground	151 - 600 volts to ground
a	3 ft.	3 ft.
b	3 ft.	3-1/2 ft.
c	3 ft.	4 ft.

Minimum clear distances may be 2 feet 6 inches for equipment built or installed before 3/20/82.

*Conditions a, b, and c are as follows:

a = Exposed live parts on one side and no live or grounded parts on the other side of the working space, or exposed live parts on both sides effectively guarded by suitable wood or other insulating material. Insulated wire or insulated bus bars operating at not over 300 volts aren't considered live parts.

b= Exposed live parts on one side and grounded parts on the other side

c = Exposed live parts on both sides of the workspace (not guarded as provided in condition (a) with the operator between the panels)

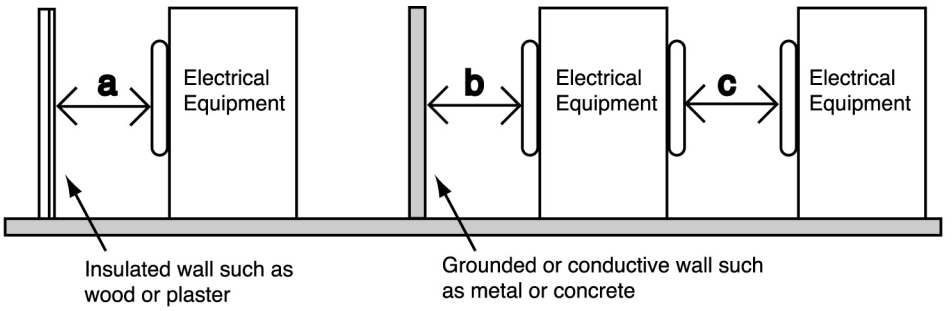

Distance are measured from live parts if they are exposed or from the enclosure front if live parts are enclosed.

WAC 296-800-28030

Maintain all flexible cords and cables in good condition and use safely

Exemption:

These rules don't apply to cords and cables that are an internal part of factory assembled appliances and equipment, like the windings on motors or wiring inside electrical panels.

Note:

Flexible cords and cables are typically used to connect electrical equipment to a power source. These cords can have an electrical plug to connect to a power source or can be permanently wired into the power source. The terms flexible cords, extension cord, cables and electrical cords all refer to a type of flexible cord.

You must

(1) Perform visual inspections.

- On portable cord- and plug-connected equipment and extension cords before use on each work shift. Defects and damage to look for include:
  - Loose parts.
  - Deformed or missing pins.
  - External defects and damage.
  - Damage to the outer covering or insulation.
  - Pinched or crushed covering or insulation that might indicate internal damage.

Exemption:

You don't need to visually inspect portable cord- and plug-connected equipment and extension cords that stay connected once in place and aren't exposed to damage until they are moved.

-Continued-

Rule

WAC 296-800-28030 (Continued)

You must

- Remove from service any defective or damaged cord until repaired and tested.
- Make sure flexible cords and cables are used as described.

(2) Use.

- Use flexible cords only as follows:
  - Wiring of equipment and appliances.
  - Data processing cables approved as a part of the data processing system.
  - Pendants.
  - Wiring for fixtures.
  - Connecting portable lamps or appliances to an approved outlet with an attachment plug.
  - Connecting stationary equipment that is frequently changed with an attachment plug energized from an approved outlet.
  - Preventing noise or vibration transmission.
  - Appliances that have been designed to permit removal for maintenance and repair if the appliance is equipped with an attachment plug energized from an approved outlet.
  - Elevator cables.
  - Wiring of cranes and hoists.

-Continued-

WAC 296-800-28030 (Continued)

Common Acceptable Uses of Flexible Cords

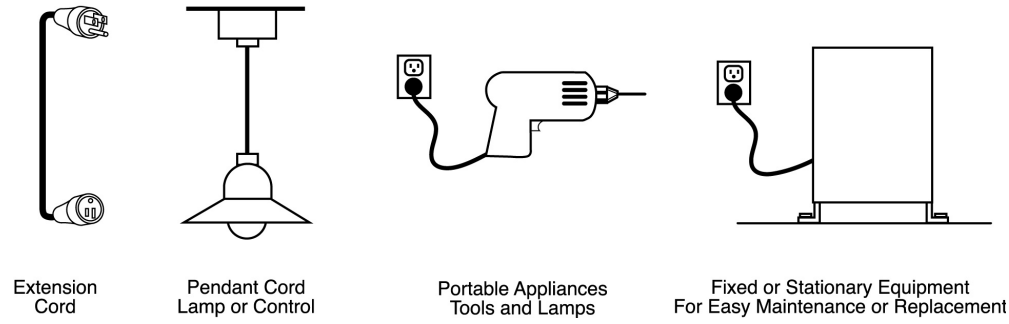

Note:

Extension cords (flexible cord sets) may be used on a temporary basis if you follow the rules described in the temporary use section, WAC 296-800-28030(3).

You must

- Not use flexible cords in the following ways:
  - As a substitute for fixed wiring of a structure
  - To run through holes in walls, ceilings, or floors
  - To run through doorways, windows, or similar openings
  - To attach to building surfaces
  - To conceal behind building walls, ceilings, or floors
  - To raise or lower equipment

-Continued-

Rule

WAC 296-800-28030 (Continued)

- Make sure flexible cords and cables are approved and suitable for:
  - The way they will be used.
  - The location where they will be used.
- Not fasten or hang cords and equipment in any way that could cause damage to the outer jacket or insulation of the cord.
- Make sure insulation on flexible cords and cables is intact.
- Make sure flexible cords and electrical cords are:
  - Connected to devices and fittings so that any pulling force on the cord is prevented from being directly transmitted to joints or terminal screws on the plug
  - Used only in continuous lengths without splice or tap.
- Prohibit your employees from using wet hands to plug or unplug equipment or extension cords if the equipment is energized.

Note:

Hard service flexible cords No. 12 or larger may be repaired or spliced if the insulation, outer sheath properties, and use characteristics of the cord are retained.

-Continued-

WAC 296-800-28030 (Continued)

You must

(3) Provide the following for temporary use.

- Make sure temporary electrical power and lighting installations that operate at 600 volts or less are used only:
  - During and for remodeling, maintenance, repair or demolition of buildings and similar activities.
  - Experimental or developmental work.
  - For no more than 90 days for:
    - Christmas decorative lighting
    - Carnivals
    - Other similar purposes
- Make sure flexible cords and electrical cords used on a temporary basis are protected from accidental damage.
  - By avoiding sharp corners and projections.
  - If they pass through doorways or other pinchpoints.

Rule

WAC 296-800-28035

Guard electrical equipment to prevent your employees from electrical hazards

You must

(1) Guard live parts of electric equipment operating at 50 volts or more against accidental contact by any of the following means:

- By approved cabinets or other forms of approved enclosures.
- By location in a room, vault, or similar enclosure that is accessible only to employees qualified to work on the equipment. Entrances to rooms and other guarded locations containing exposed live parts must be marked with conspicuous warning signs forbidding unqualified persons to enter.
- By permanent, substantial partitions or screens so that only employees qualified to work on the equipment will have access within reach of the live parts. Any openings must prevent accidental contact with live parts by employees or objects employees carry.
- By location on a balcony, gallery, or platform that will exclude unqualified persons.
- By being located 8 feet or more above the floor or other working surface.

(2) Make sure all electrical appliances, fixtures, lampholders, lamps, rosettes, and receptacles don't have live parts normally exposed to employee contact.

- Rosettes and cleat type lampholders at least 8 feet above the ground may have exposed parts.

-Continued-

WAC 296-800-28035 (Continued)

(3) In locations where electric equipment would be exposed to physical damage, enclosures or guards must be so arranged and of such strength as to prevent such damage.

Live Parts Guarded by Distance

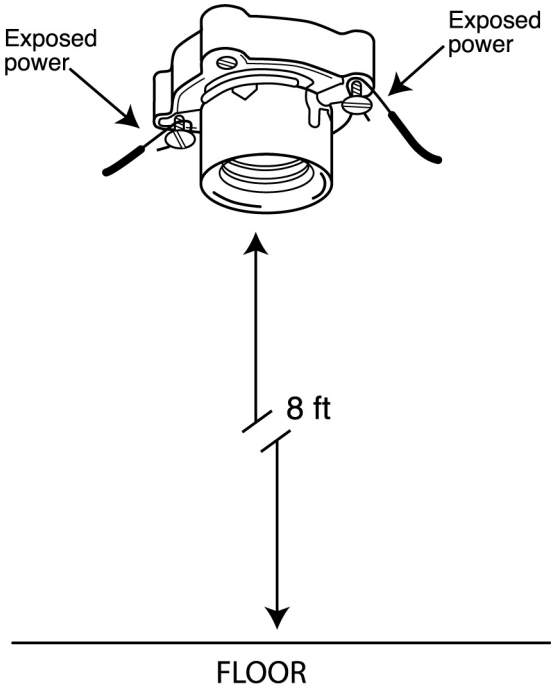

Rule

WAC 296-800-28040

Make sure electrical equipment is effectively grounded

You must

- Make sure the path to ground from circuits, equipment, and enclosures is permanent and continuous.
- Make sure equipment connected by cord and plug is grounded under these conditions:
  - Equipment with exposed noncurrent carrying metal parts
  - Cord and plug connected equipment which may become energized
  - Equipment that operates at over 150 volts to ground
  - Equipment in hazardous locations. (WAC 296-24-95613)

Exemption:

This doesn't apply to guarded motors and metal frames of electrically heated appliances, if the appliance frames are permanently and effectively insulated from ground.

You must

- Ground the following type of equipment:
  - Hand-held motor-operated tools
  - Refrigerators
  - Freezers
  - Air conditioners
  - Clothes washers and dryers
  - Dishwashers
  - Electrical aquarium equipment
  - Hedge clippers
  - Electric lawn mowers

-Continued-

WAC 296-800-28040 (Continued)

- Electric snow blowers
- Wet scrubbers
- Tools likely to be used in damp or wet locations
- Appliances used by employees standing on the ground, on metal floors or working inside of metal tanks or boilers
- Portable hand lamps.

Note:

Grounding can be achieved by: Using tools and appliances equipped with an equipment grounding conductor (3-prong plug and grounded electrical system).

Grounded Plug	Double Insulated
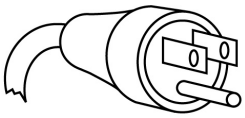	**Double Insulated**
Hand held tools and some other types of equipment must use a 3-wire plug or the tool label must show the tool as insulated by words or symbol.	

You must

- Make sure exposed metal parts of fixed equipment that don't conduct electricity, but may become energized, are grounded if the equipment is in a wet or damp location and isn't isolated.
- Make sure ground wires are identified and look different than the other conductors (wires).

-Continued-

Rule

WAC 296-800-28040 (Continued)

- Make sure grounded conductors aren't attached to any terminal or lead to reverse polarity of the electrical outlet or receptacle. See illustration - Examples of wiring.
- Make sure grounding terminals or grounding-type devices on receptacles, cords, connectors, or attachments plugs aren't used for purposes other than grounding.

WAC 296-800-28040 (Continued)

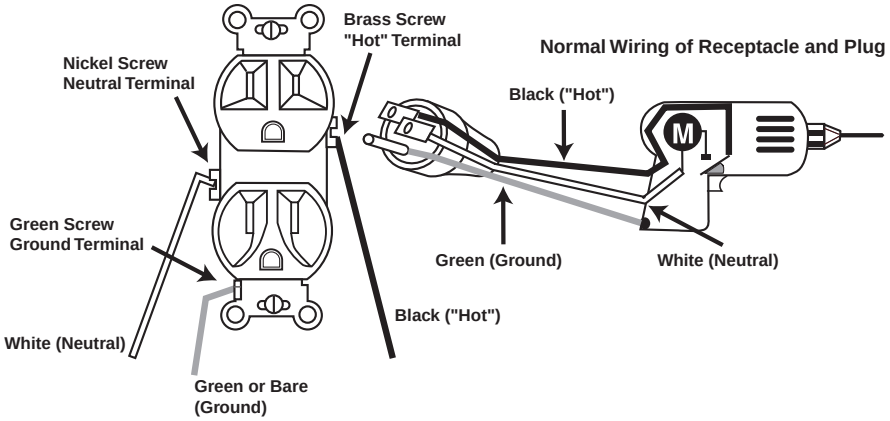

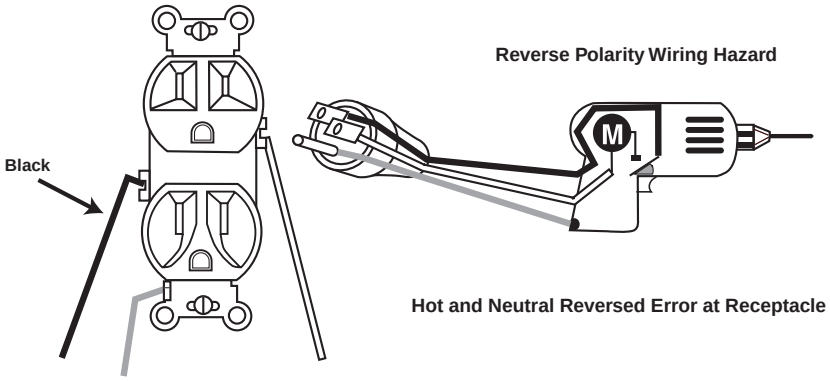

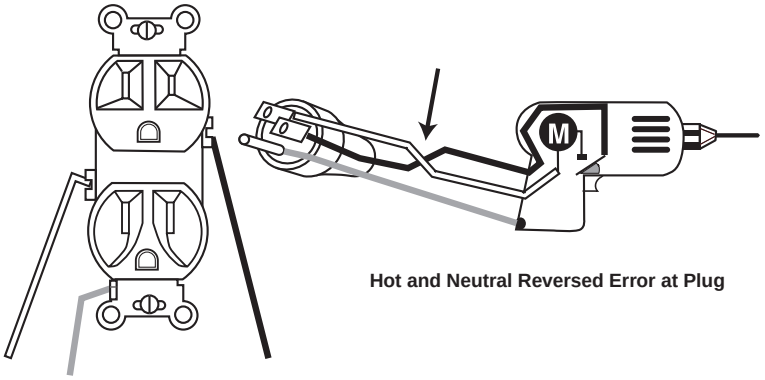

6I ZIVWITSPEWX][MWRKGERGEWEJEYPX]XSSPXSWXEWSSREWMXMWTPYKK
SVRSXWXST[LIRXLIWMXGLMWVIPIEWSLMWGSYPHGEYWIERMRNYXVIQIP]
HERKIVSYWX]TISJZIVWITSPEWX][MWRKMXGLIWXLILSXERHKVSYRH[MSLWW
GEYWIWXLIFSH]SJXLIXSSPEVTPMERGIXSFILSXSYGLMRKXLIXSSPERH
GSRHYGXWZEGIGERVIWYPXMWSYWSZIRHIEHP]WLSG

Rule

WAC 296-800-28045

Make sure electrical equipment has overcurrent protection.

You must

- Make sure all electrical circuits that are rated at 600 volts or less have overcurrent protection.
- Protect conductors and equipment according to their ability to safely conduct electrical current.
- Make sure overcurrent devices don't interrupt the continuity of grounded conductors unless all conductors are opened at the same time, except for motor running overload protection.
  - Protect employees from electrical arcing or suddenly moving electrical parts by locating fuses and circuit breakers in safe places. If this isn't possible, install shields on fuses and circuit breakers.
- Make sure the following fuses and thermo cutouts have disconnecting mechanisms:
  - All cartridge fuses accessible to nonqualified persons
  - All fuses on circuits over 150 volts to ground
  - All thermal cutouts on circuits over 150 volts to ground
  - The disconnecting mechanisms must be installed so you can disconnect the fuses or thermal cutouts without disrupting service to equipment and circuits unrelated to those protected by the overcurrent device.

-Continued-

WAC 296-800-28045 (Continued)

- Provide easy access to overcurrent devices for each employee or authorized building management personnel.
- Protect the overcurrent devices by locating them away from easily ignitable material.
  - They must be placed to avoid exposure to physical damage.
- Make sure circuit breakers:
  - Clearly indicate when they are open (off) and closed (on)
  - That operate vertically are installed so the handle is in the “up” position when the breaker is closed (on). See WAC 296-24-95603 (2)(c) for more information
  - Used as switches in 120-volt, fluorescent lighting circuit must be approved for that purpose and marked “SWD.” See WAC 296-24-95603 (2)(c) for more information.
  - That have arcing or suddenly moving parts, are shielded or located so employees won't get burned or injured by the operation of the circuit breaker.
- Make sure fuses that have arcing or suddenly moving parts, are sheilded or located so employees won't get burned or injured by the operation of the fuses.

Notes

Portable Ladders: Metal & Wooden

WAC 296-800-290

Summary

YOUR RESPONSIBILITY:

To make sure the portable ladders in your workplace are used safely and kept in good condition

PORTABLE METAL LADDERS

You must

Inspect your portable metal ladders periodically
WAC 296-800-29005 ..... Page 290-3

Make sure your portable metal ladders are kept in good condition
WAC 296-800-29010 ..... Page 290-4

Use your portable metal ladders safely
WAC 296-800-29015 ..... Page 290-5

PORTABLE WOODEN LADDERS

You must

Inspect your portable wooden ladders frequently
WAC 296-800-29020 ..... Page 290-7

Make sure your portable wooden ladders are kept in a good condition
WAC 296-800-29025 ..... Page 290-7

Use your portable wooden ladders safely and for their intended purpose
WAC 296-800-29030 ..... Page 290-8

Safely use a portable wooden ladder when working more than 25 feet above ground
WAC 296-800-29035 ..... Page 290-10

Use wooden stepladders safely
WAC 296-800-29040 ..... Page 290-10

-Continued-

Portable Ladders: Metal & Wooden

WAC 296-800-290

Summary

(Continued)

Exemption:

These rules apply to common types of portable wooden ladders except:

- Fruit picker ladders
- Industrial tripod ladders
- Combination step and extension ladders
- Stockroom step ladders
- Aisle way step ladders
- Shelf ladders
- Library ladders
- Other special ladders.

Note:

- For design and construction requirements for wood and metal ladders, see WAC 296-24-780 and 296-24-79503 of the General Safety and Health Standard.
- There are different types of ladders. Be sure to use one that is capable of handling the combined weight of the climber and the load being carried (working load).

Type	Duty Rating	Working Load
IAA	Industrial	Special duty - 375 lbs. maximum
IA	Industrial	Extra heavy - 300 lbs. maximum
I	Industrial	Heavy - 250 lbs. maximum
II	Commercial	Medium - 225 lbs. maximum
III	Household	Light - 200 lbs. maximum

PORTABLE METAL LADDERS

WAC 296-800-29005

Inspect your portable metal ladders periodically

You must

- Immediately inspect a ladder if it:
  - Tips over
  - Is exposed to oil or grease
  - Is exposed to excessive heat as in the case of fire
  - Is subjected to certain acids or alkali solutions.
- If it tips over, look at:
  - The rails for dents, bends or dented rungs
  - All the rungs to side rail connections
  - The hardware connections
  - Rivets for shear damage.
- Inspect the cables and ropes on portable metal ladders and replace them if they are defective.
- Check hardware fittings and accessories frequently and keep them in good condition.
- Mark defective ladders and take them out of service until repaired by a maintenance department or the manufacturer.

Portable Ladders: Metal & Wooden

WAC 296-800-290

Rule

WAC 296-800-29010

Make sure your portable metal ladders are kept in good condition

You must

- Maintain your portable metal ladders in good, usable condition, at all times.
- Handle portable metal ladders with care and avoid dropping, jarring, or misusing them.
- Store your portable metal ladders on racks designed to protect them when not in use. The racks must have enough supporting points to prevent any possibility of excessive sagging.
- Properly support your ladder while transporting on vehicles. To prevent chafing and the effects of road shock, use supports that are made of material softer than the metal ladder, such as hardwood or rubber-covered iron pipe.

Note:

Tying the ladder to each support point will greatly reduce damage due to road shock.

WAC 296-800-29015

Use your portable metal ladders safely

You must

(1) Use metal ladders only for their intended purpose.

(2) Make sure the base section of the portable metal ladder has secure footing.

Examples of Securing the Ladder Base

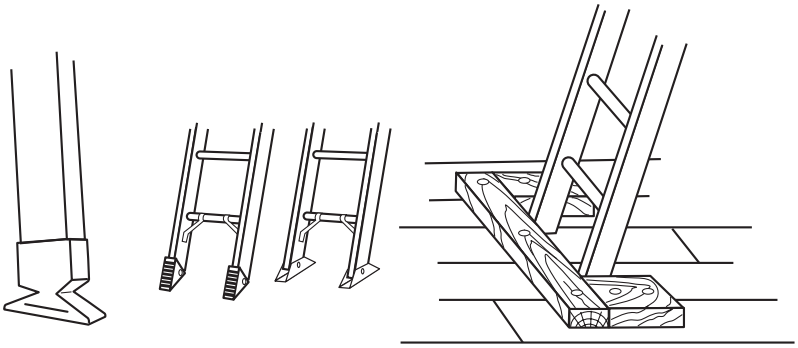

Rubber Safety Feet | Spikes | Cleats Nailed to the Floor

(3) Make sure both rails are supported at the top, unless the ladder has a single support attachment.

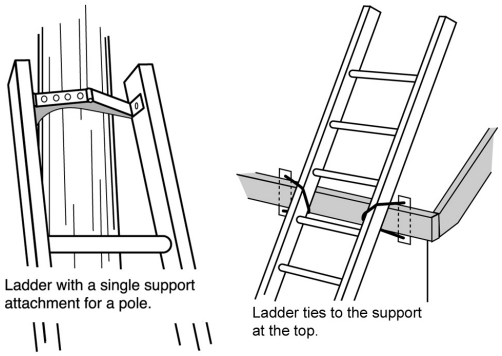

-Continued-

Portable Ladders: Metal & Wooden

WAC 296-800-290

Rule

WAC 296-800-29015 (Continued)

(4) Make sure while climbing portable metal ladders, your employees:

- Have both hands free to hold on to the ladder.
- Face the ladder when you are climbing up or down.

(5) Not tie or fasten ladder sections together to make longer ladders (unless the ladder manufacturer endorses this type of use, and you have hardware fittings specifically designed for this use).

(6) Make sure a nonself-supporting portable ladder is set at a safe angle. The proper angle is to place the base a distance from the vertical wall equal to 1/4 the working length of the ladder.

Note:

Safe ladder angle. A simple rule for setting up a ladder at the proper angle is to place the base a distance from the wall, equal to 1/4 the working length of the ladder.

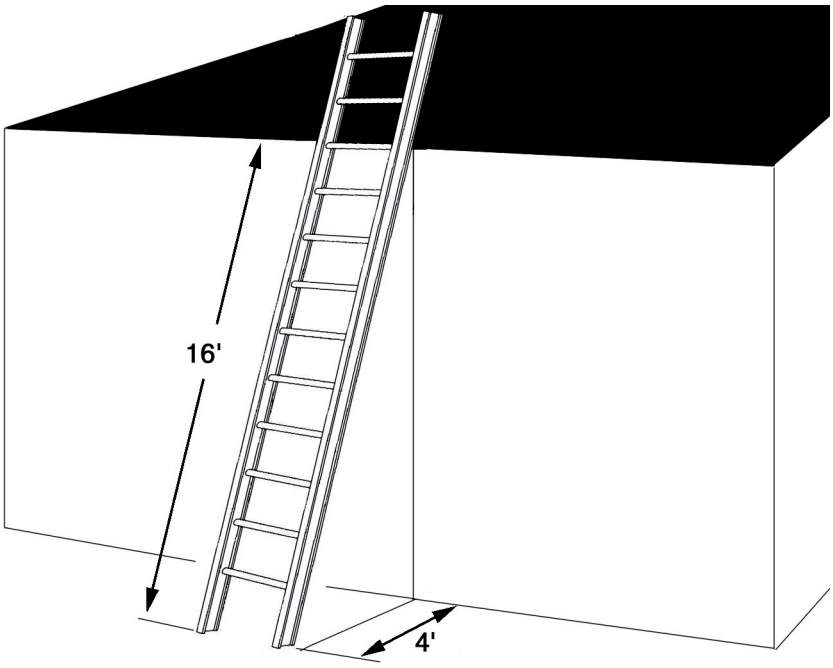

PORTABLE WOODEN LADDERS

WAC 296-800-29020

Inspect your portable wooden ladders frequently

You must

- Make sure ladders with defects are:
  - Withdrawn from service to be repaired or destroyed
  - Tagged as “dangerous do not use.”

WAC 296-800-29025

Make sure your portable wooden ladders are kept in good condition

You must

- Make sure your portable wooden ladders are maintained in good condition, and
  - Joints between the steps or rungs and side rails are tight
  - Hardware and fittings are securely attached
  - Moveable parts operate freely without binding or excessive play
  - Metal bearings are lubricated frequently
  - Frayed or badly worn ropes are replaced
  - Safety feet and other auxiliary equipment are kept in good condition.
- Not use portable wooden ladders with
  - Broken or missing steps
  - Broken or missing rungs or cleats
  - Broken side rails
  - Other faulty equipment.
- Not make improvised repairs on your portable wooden ladders.
- Not store your portable wooden ladders near sources of heat, moisture, or dampness.

Portable Ladders: Metal & Wooden

WAC 296-800-290

Rule

WAC 296-800-29030

Use your portable wooden ladders safely and for their intended purpose

You must

(1) Use the appropriate length of ladder.

- Use single ladders less than or equal to 30 feet long.
- Use 2-section extension ladders less than or equal to 60 feet long.

(2) Make sure ladders meet the following rules:

- Shorter sections can't be spliced to make longer sections.
- Ladders can't be made by fastening cleats across a single rail.

(3) Use ladders safely.

- Make sure ladders aren't used as guys, braces, or skids.
- Putting ladders on boxes, barrels or other unstable bases to make the ladder taller isn't allowed.
- Make sure ladders aren't used in a horizontal position.

(4) Make sure that rung and cleat ladders are set up at a safe angle. (See note and illustration on safe ladder angle in WAC 296-800-29015.)

(5) Make sure that where the top of the ladder rests is reasonably rigid and strong enough to support the load.

(6) Place the bottom of a portable wooden ladder so it won't slip, or the bottom must be tied or held in position.

-Continued-

WAC 296-800-29030 (Continued)

(7) Not place a portable wooden ladder in front of doors that open towards the ladder, unless you:

- Block the door open

  OR

- Lock the door

  OR

- Guard the door to keep it from opening into the ladder.

(8) Make sure 2-section extension ladders overlap as follows:

Length of Section of extension ladders (Feet)	Minimum overlap allowed (Feet)
Less than 36	3
37-48	4
49-60	5

(9) Make sure ladders with metal reinforced rails are used with the reinforcement on the underside to avoid hazards such as tripping and electrocution.

(10) Not place ladders in elevator shafts and hoistways, except where used by workers assigned to that type of work.

- Employees must be protected from falling objects, when assigned to work on ladders in elevator shafts and hoistways.

(11) Not support more than one section of plank per ladder rung.

- Don't allow more than 2 persons on one section of planking at a time.

(12) Brace the ladder to reduce the spring caused by weight on the ladder.

(13) Keep shoes free and clean of greasy and slippery substances when climbing.

(14) Have both hands free to hold on to the ladder when climbing.

Portable Ladders: Metal & Wooden

WAC 296-800-290

Rule

WAC 296-800-29035

Safely use a portable wooden ladder when working more than 25 feet above ground

You must

(1) Secure the ladder at the top and bottom.

(2) Not perform work that requires the use of both hands unless wearing a safety belt and lanyard secured to the ladder.

(3) Not perform work requiring eye protection, respirators and/or pressure equipment if 30 feet above the ground.

WAC 296-800-29040

Use wooden stepladders safely

You must

(1) Use stepladders that are less than 20 feet.

(2) Not climb on the bracing or the back legs.

(3) Not use as single ladders.

(4) Not stand on a step higher than the third step from the top, if working 5 feet or higher from the ground.

(5) Not use the tops of stepladders as steps.