Basic Electrical

WAC 296-800-280

Summary

YOUR RESPONSIBILITY:

To protect your employees from hazards when working with electrical equipment, tools, and appliances

You must

Inspect all electrical equipment your employees use to make sure the equipment is safe
WAC 296-800-28005 ..... Page 280-4

Make sure all electrical equipment is used for its approved or listed purpose
WAC 296-800-28010 ..... Page 280-5

Make sure electrical equipment used or located in wet or damp locations is designed for such use
WAC 296-800-28015 ..... Page 280-6

Make sure electrical equipment that isn't marked by the manufacturer can't be used
WAC 296-800-28020 ..... Page 280-7

Identify disconnecting means
WAC 296-800-28022 ..... Page 280-8

Maintain electrical fittings, boxes, cabinets, and outlets in good condition
WAC 296-800-28025 ..... Page 280-9

Maintain all flexible cords and cables in good condition and use safely
WAC 296-800-28030 ..... Page 280-11

Guard electrical equipment to prevent your employees from electrical hazards
WAC 296-800-28035 ..... Page 280-16

-Continued-

Summary

WAC 296-800-280 (Continued)

Make sure electrical equipment is effectively grounded
WAC 296-800-28040 ..... Page 280-18

Make sure electrical equipment has overcurrent protection
WAC 296-800-28045 ..... Page 280-22

Exemptions:

- These rules apply to all electrical equipment used in the workplace, except for:
  - Electrical installations and equipment on ships, aircraft and all automotive vehicles other than mobile homes and recreational vehicles.
  - Electrical installations and equipment used to generate, transmit, transform or distribute power exclusively for operation of rolling stock.
  - Electrical installations used exclusively for signaling and communicating with rolling stock.
  - Installations underground in mines.
  - Installations of communication equipment located outdoors or inside buildings used and controlled exclusively by communication utilities.
  - Installations controlled and used exclusively by electric utilities for communication or metering.

  OR

For generating, controlling, transforming, transmitting and distributing electric energy in buildings used exclusively by the company located:

- Outdoors on property owned or leased by the utility;

  OR

- On public highways, streets and roads;

  OR

- Outdoors by established rights on private property.

-Continued-

WAC 296-800-280 (Continued)

Note:

- The introduction has important information about fire, building and electrical codes that may apply to you in addition to WISHA rules. See "How do the WISHA rules relate to fire, building and electrical codes" in the introduction section of this book.
- These rules guide how electrical equipment is used and maintained in your workplace. They shouldn't be used in place of your local electrical codes if you are installing electrical wiring, electrical circuits or electrical distribution equipment.
- This rule applies to 600 volts or less. Requirements for specific equipment or special installation are found in Chapter 296-24 WAC, Part L.

Rule

WAC 296-800-28005

Inspect all electrical equipment your employees use to make sure the equipment is safe

You must

- Inspect electrical equipment to make sure there are no recognized hazards likely to cause your employees' death or serious physical harm. Determine the safety of the equipment by using the following list:
  - Has been approved or listed by a recognized testing laboratory, such as Underwriters Laboratories (UL) or other approving agency.
  - Is approved, or listed as approved, for the purpose it is being used.
  - Has strong and durable guards providing adequate protection including parts designed to enclose and protect other equipment.
  - Is insulated.
  - Won't overheat under conditions of use.
  - Won't produce arcs during normal use.
  - Is classified by:
    - Type
    - Size
    - Voltage
    - Current capacity
    - Specific use
    - Other factors.

WAC 296-800-28010

Make sure all electrical equipment is used for its approved or listed purpose

Definitions:

- Electrical outlets are places on an electric circuit where power is supplied to equipment through receptacles, sockets and outlets for attachment plugs.
- Receptacles are outlets that accept a plug to supply electric power to equipment through a cord or cable.

You must

- Make sure electrical outlets are rated equal or greater to the electrical load supplied.
- Make sure the proper mating configuration exists when connecting the attachment plug to a receptacle.
- Make sure when electrical outlets, cord connectors, and receptacles are joined, they accept the attachment plug with the same voltage or current rating.

SOME COMMON ELECTRICAL OUTLET (RECEPTACLE) CONFIGURATIONS

	15 Ampere	20 Ampere	30 Ampere	50 Ampere
Two Pole 3 - Wire Grounding 125 Volt		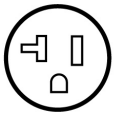	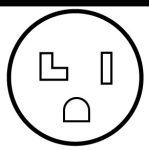	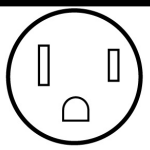
Three Pole 3 - Wire 125/250 Volt				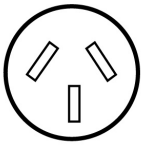

Note: A 20-ampere "T-solt" outlet or cord connector may accept a 15-ampere attachment plug of the same voltage rating.

Rule

WAC 296-800-28015

Make sure electrical equipment used or located in wet or damp locations is designed for such use

You must

- Make sure fixtures and receptacles located in wet or damp locations are approved for such use. They must be constructed or installed so that water can't enter or accumulate in wireways, lampholders, or other electrical parts.
- Make sure cabinets, fittings, boxes, and other enclosures in wet or damp locations are installed to prevent moisture or water from entering and accumulating inside.
  - In wet locations these enclosures must be weatherproof.
  - Switches, circuit breakers, and switchboards located in wet locations must be in weatherproof enclosures.

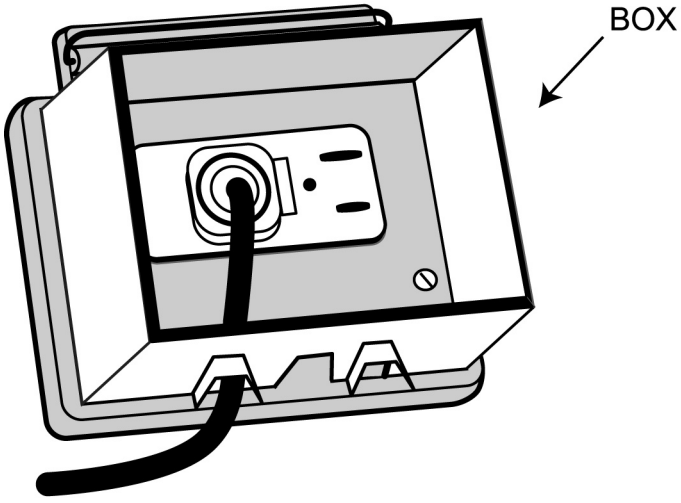

Electrical equipment used in wet locations must be weatherproof.

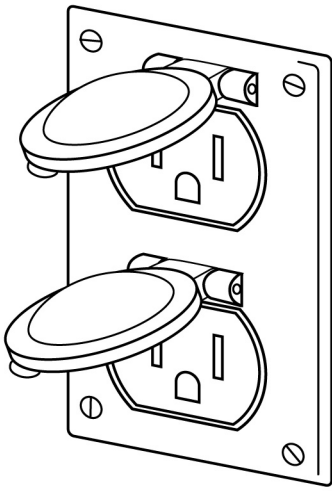

WAC 296-800-28020

Make sure electrical equipment that isn't marked by the manufacturer can't be used

You must

- Make sure markings are durable and appropriate to the environment.
- Appropriate markings include:
  - The manufacturer's name;

    OR
  - Trademark;

    OR
  - The organization responsible for the product;

    AND
  - Voltage, current and wattage, or other ratings as necessary.

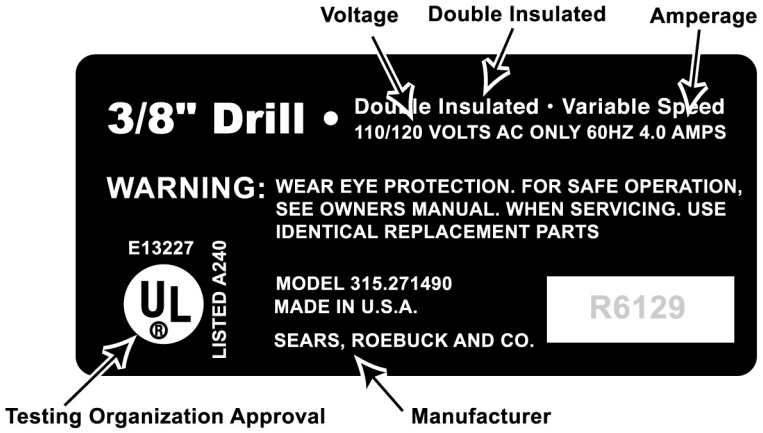

Electrical tools and equipment marked to show manufacturer, approvals and power requirements.

Rule

WAC 296-800-28022

Identify disconnecting means

You must

- Make sure the disconnect means (such as on/off switches and circuit breakers) is marked to show when it's open and closed and what equipment it controls, unless located and arranged so the purpose is obvious.
- Make sure each service, feeder and branch circuit is marked, at its disconnecting means or overcurrent device, to show when the circuit is open and closed and what circuit it controls, unless located and arranged so the purpose is obvious.
- Make sure markings are durable and appropriate to the environment.

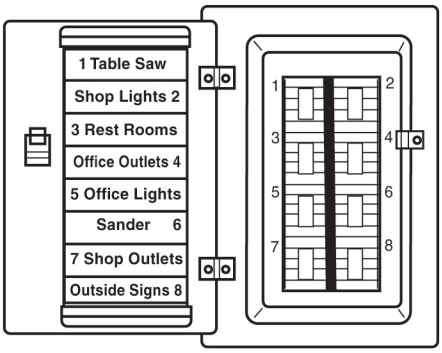

Electrical panel circuit breakers labeled to show the equipment or circuits they control.

WAC 296-800-28025

Maintain electrical fittings, boxes, cabinets and outlets in good condition

You must

(1) Do the following to covers and openings.

- Do the following when conductors enter boxes, cabinets, or fittings:
  - Protect the conductor (wires) from abrasion.
  - Effectively close the openings where conductors enter.
  - Effectively close all unused openings.
- Provide pull boxes, junction boxes, and fittings with covers approved for the purpose.
- Make sure each outlet box has a cover, faceplate, or fixture canopy in completed installations.
- Make sure covers for outlet boxes with openings for flexible cord pendants have bushings to protect the cord, or have a smooth and well rounded surface where the cord touches the opening.
- Ground metal covers.

(2) Make sure the area in front of electrical panels, circuit breaker boxes and similar equipment which operates at 600 volts or less:

- Has sufficient working area at least 30 inches wide for operation and maintenance of the equipment.
- Is kept clear and free of stored materials so that employees can access this equipment for servicing, adjustments or maintenance.
- Has at least one access route to provide free and unobstructed access.
- Has at least 3 feet of working space in front, measured from the exposed live parts or the enclosure front (See the work clearance table on the following page).
- Has adequate indoor lighting (WAC 296-800-210).
- Has at least 6 feet 3 inches of headroom.

-Continued-

Rule

WAC 296-800-28025 (Continued)

This table shows the area you must keep clear depending on the layout of the electrical equipment.

Conditions*	0 - 150 Volts to ground	151 - 600 volts to ground
a	3 ft.	3 ft.
b	3 ft.	3-1/2 ft.
c	3 ft.	4 ft.

Minimum clear distances may be 2 feet 6 inches for equipment built or installed before 3/20/82.

*Conditions a, b, and c are as follows:

a = Exposed live parts on one side and no live or grounded parts on the other side of the working space, or exposed live parts on both sides effectively guarded by suitable wood or other insulating material. Insulated wire or insulated bus bars operating at not over 300 volts aren't considered live parts.

b= Exposed live parts on one side and grounded parts on the other side

c = Exposed live parts on both sides of the workspace (not guarded as provided in condition (a) with the operator between the panels)

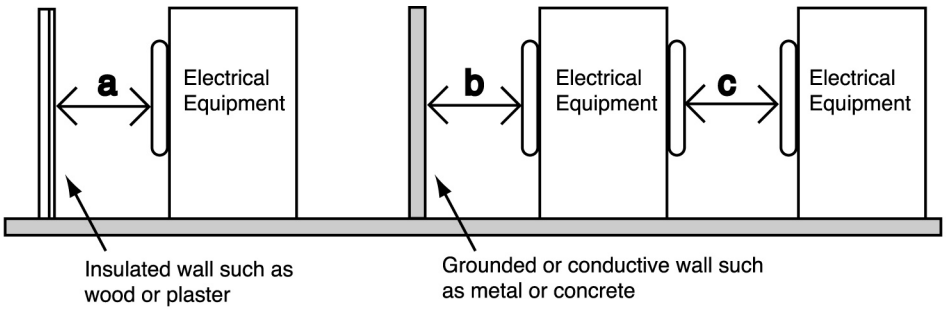

Distance are measured from live parts if they are exposed or from the enclosure front if live parts are enclosed.

WAC 296-800-28030

Maintain all flexible cords and cables in good condition and use safely

Exemption:

These rules don't apply to cords and cables that are an internal part of factory assembled appliances and equipment, like the windings on motors or wiring inside electrical panels.

Note:

Flexible cords and cables are typically used to connect electrical equipment to a power source. These cords can have an electrical plug to connect to a power source or can be permanently wired into the power source. The terms flexible cords, extension cord, cables and electrical cords all refer to a type of flexible cord.

You must

(1) Perform visual inspections.

- On portable cord- and plug-connected equipment and extension cords before use on each work shift. Defects and damage to look for include:
  - Loose parts.
  - Deformed or missing pins.
  - External defects and damage.
  - Damage to the outer covering or insulation.
  - Pinched or crushed covering or insulation that might indicate internal damage.

Exemption:

You don't need to visually inspect portable cord- and plug-connected equipment and extension cords that stay connected once in place and aren't exposed to damage until they are moved.

-Continued-

Rule

WAC 296-800-28030 (Continued)

You must

- Remove from service any defective or damaged cord until repaired and tested.
- Make sure flexible cords and cables are used as described.

(2) Use.

- Use flexible cords only as follows:
  - Wiring of equipment and appliances.
  - Data processing cables approved as a part of the data processing system.
  - Pendants.
  - Wiring for fixtures.
  - Connecting portable lamps or appliances to an approved outlet with an attachment plug.
  - Connecting stationary equipment that is frequently changed with an attachment plug energized from an approved outlet.
  - Preventing noise or vibration transmission.
  - Appliances that have been designed to permit removal for maintenance and repair if the appliance is equipped with an attachment plug energized from an approved outlet.
  - Elevator cables.
  - Wiring of cranes and hoists.

-Continued-

WAC 296-800-28030 (Continued)

Common Acceptable Uses of Flexible Cords

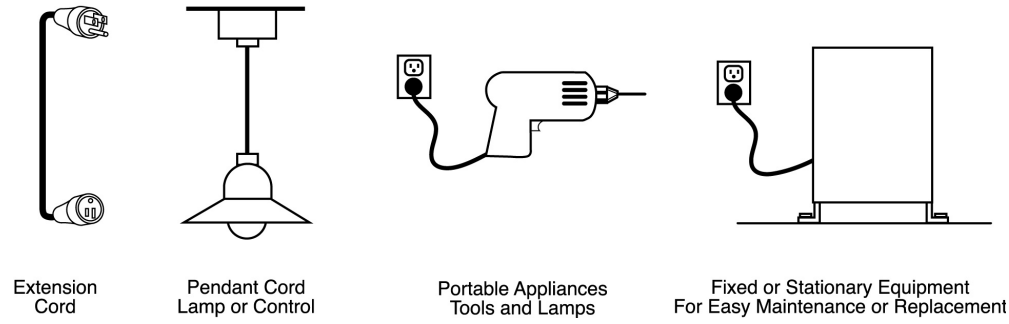

Note:

Extension cords (flexible cord sets) may be used on a temporary basis if you follow the rules described in the temporary use section, WAC 296-800-28030(3).

You must

- Not use flexible cords in the following ways:
  - As a substitute for fixed wiring of a structure
  - To run through holes in walls, ceilings, or floors
  - To run through doorways, windows, or similar openings
  - To attach to building surfaces
  - To conceal behind building walls, ceilings, or floors
  - To raise or lower equipment

-Continued-

Rule

WAC 296-800-28030 (Continued)

- Make sure flexible cords and cables are approved and suitable for:
  - The way they will be used.
  - The location where they will be used.
- Not fasten or hang cords and equipment in any way that could cause damage to the outer jacket or insulation of the cord.
- Make sure insulation on flexible cords and cables is intact.
- Make sure flexible cords and electrical cords are:
  - Connected to devices and fittings so that any pulling force on the cord is prevented from being directly transmitted to joints or terminal screws on the plug
  - Used only in continuous lengths without splice or tap.
- Prohibit your employees from using wet hands to plug or unplug equipment or extension cords if the equipment is energized.

Note:

Hard service flexible cords No. 12 or larger may be repaired or spliced if the insulation, outer sheath properties, and use characteristics of the cord are retained.

-Continued-

WAC 296-800-28030 (Continued)

You must

(3) Provide the following for temporary use.

- Make sure temporary electrical power and lighting installations that operate at 600 volts or less are used only:
  - During and for remodeling, maintenance, repair or demolition of buildings and similar activities.
  - Experimental or developmental work.
  - For no more than 90 days for:
    - Christmas decorative lighting
    - Carnivals
    - Other similar purposes
- Make sure flexible cords and electrical cords used on a temporary basis are protected from accidental damage.
  - By avoiding sharp corners and projections.
  - If they pass through doorways or other pinchpoints.

Rule

WAC 296-800-28035

Guard electrical equipment to prevent your employees from electrical hazards

You must

(1) Guard live parts of electric equipment operating at 50 volts or more against accidental contact by any of the following means:

- By approved cabinets or other forms of approved enclosures.
- By location in a room, vault, or similar enclosure that is accessible only to employees qualified to work on the equipment. Entrances to rooms and other guarded locations containing exposed live parts must be marked with conspicuous warning signs forbidding unqualified persons to enter.
- By permanent, substantial partitions or screens so that only employees qualified to work on the equipment will have access within reach of the live parts. Any openings must prevent accidental contact with live parts by employees or objects employees carry.
- By location on a balcony, gallery, or platform that will exclude unqualified persons.
- By being located 8 feet or more above the floor or other working surface.

(2) Make sure all electrical appliances, fixtures, lampholders, lamps, rosettes, and receptacles don't have live parts normally exposed to employee contact.

- Rosettes and cleat type lampholders at least 8 feet above the ground may have exposed parts.

-Continued-

WAC 296-800-28035 (Continued)

(3) In locations where electric equipment would be exposed to physical damage, enclosures or guards must be so arranged and of such strength as to prevent such damage.

Live Parts Guarded by Distance

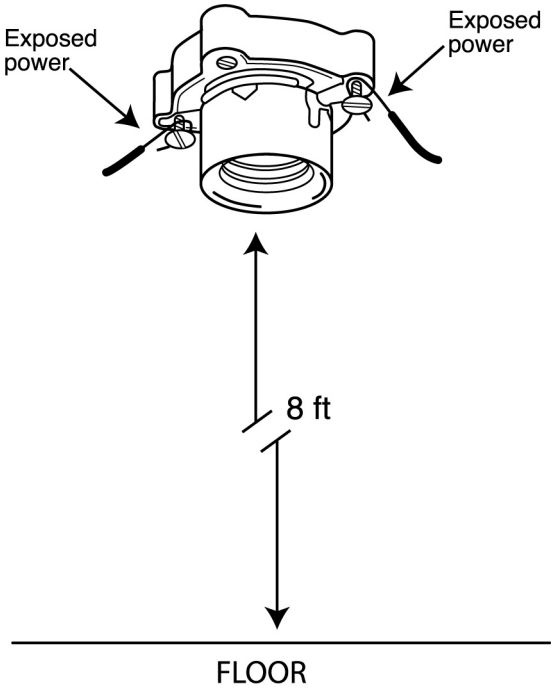

Rule

WAC 296-800-28040

Make sure electrical equipment is effectively grounded

You must

- Make sure the path to ground from circuits, equipment, and enclosures is permanent and continuous.
- Make sure equipment connected by cord and plug is grounded under these conditions:
  - Equipment with exposed noncurrent carrying metal parts
  - Cord and plug connected equipment which may become energized
  - Equipment that operates at over 150 volts to ground
  - Equipment in hazardous locations. (WAC 296-24-95613)

Exemption:

This doesn't apply to guarded motors and metal frames of electrically heated appliances, if the appliance frames are permanently and effectively insulated from ground.

You must

- Ground the following type of equipment:
  - Hand-held motor-operated tools
  - Refrigerators
  - Freezers
  - Air conditioners
  - Clothes washers and dryers
  - Dishwashers
  - Electrical aquarium equipment
  - Hedge clippers
  - Electric lawn mowers

-Continued-

WAC 296-800-28040 (Continued)

- Electric snow blowers
- Wet scrubbers
- Tools likely to be used in damp or wet locations
- Appliances used by employees standing on the ground, on metal floors or working inside of metal tanks or boilers
- Portable hand lamps.

Note:

Grounding can be achieved by: Using tools and appliances equipped with an equipment grounding conductor (3-prong plug and grounded electrical system).

Grounded Plug	Double Insulated
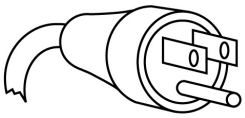	**Double Insulated**
Hand held tools and some other types of equipment must use a 3-wire plug or the tool label must show the tool as insulated by words or symbol.	

You must

- Make sure exposed metal parts of fixed equipment that don't conduct electricity, but may become energized, are grounded if the equipment is in a wet or damp location and isn't isolated.
- Make sure ground wires are identified and look different than the other conductors (wires).

-Continued-

Rule

WAC 296-800-28040 (Continued)

- Make sure grounded conductors aren't attached to any terminal or lead to reverse polarity of the electrical outlet or receptacle. See illustration - Examples of wiring.
- Make sure grounding terminals or grounding-type devices on receptacles, cords, connectors, or attachments plugs aren't used for purposes other than grounding.

WAC 296-800-28040 (Continued)

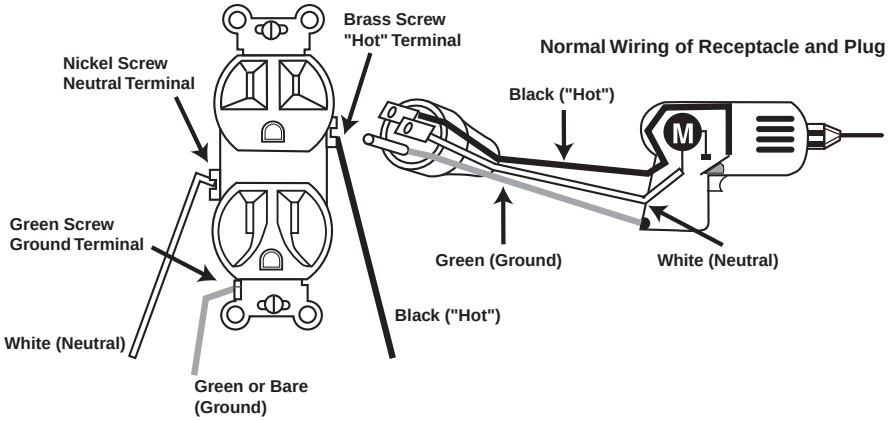

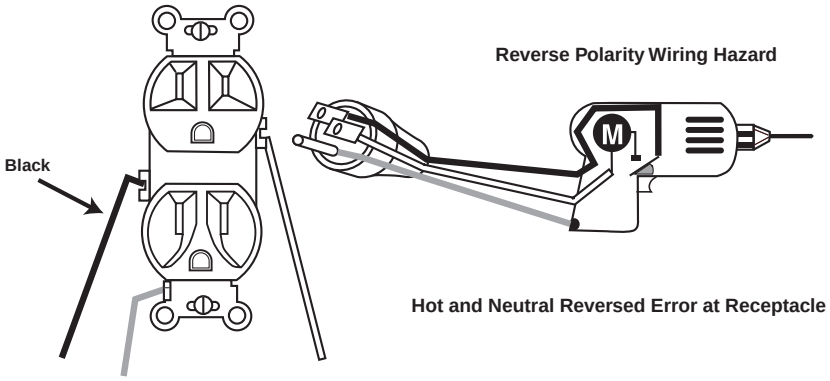

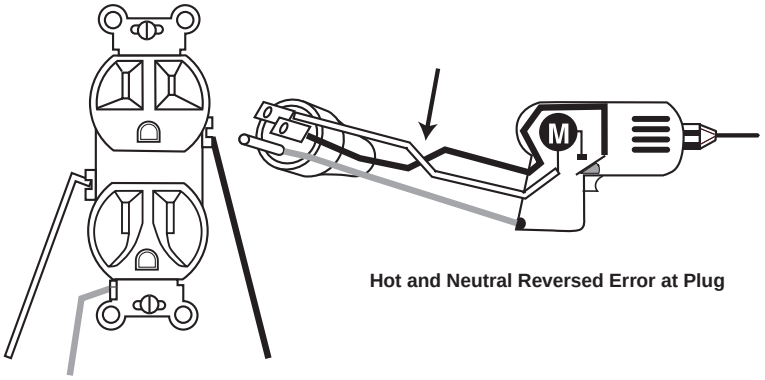

6I ZIVWITSPEWX][MWRKGERGEWEJEYPX]XSSPXSWXEWSSREWMXMWTPYKK
SVRSXWXST[LIRXLIWMXGLMWVIPIEWSLMWGSYPHGEYWIERMRNYXVIQIP]
HERKIVSYWX]TISJZIVWITSPEWX][MWRKMXGLIWXLILSXERHKVSYRH[MSLWW
GEYWIWXLIFSH]SJXLIXSSPEVTPMERGIXSFILSXSYGLMRKXLIXSSPERH
GSRHYGXWZEGIGERVIWYPXMWSYWSZIRHIEHP]WLSG

Rule

WAC 296-800-28045

Make sure electrical equipment has overcurrent protection.

You must

- Make sure all electrical circuits that are rated at 600 volts or less have overcurrent protection.
- Protect conductors and equipment according to their ability to safely conduct electrical current.
- Make sure overcurrent devices don't interrupt the continuity of grounded conductors unless all conductors are opened at the same time, except for motor running overload protection.
  - Protect employees from electrical arcing or suddenly moving electrical parts by locating fuses and circuit breakers in safe places. If this isn't possible, install shields on fuses and circuit breakers.
- Make sure the following fuses and thermo cutouts have disconnecting mechanisms:
  - All cartridge fuses accessible to nonqualified persons
  - All fuses on circuits over 150 volts to ground
  - All thermal cutouts on circuits over 150 volts to ground
  - The disconnecting mechanisms must be installed so you can disconnect the fuses or thermal cutouts without disrupting service to equipment and circuits unrelated to those protected by the overcurrent device.

-Continued-

WAC 296-800-28045 (Continued)

- Provide easy access to overcurrent devices for each employee or authorized building management personnel.
- Protect the overcurrent devices by locating them away from easily ignitable material.
  - They must be placed to avoid exposure to physical damage.
- Make sure circuit breakers:
  - Clearly indicate when they are open (off) and closed (on)
  - That operate vertically are installed so the handle is in the “up” position when the breaker is closed (on). See WAC 296-24-95603 (2)(c) for more information
  - Used as switches in 120-volt, fluorescent lighting circuit must be approved for that purpose and marked “SWD.” See WAC 296-24-95603 (2)(c) for more information.
  - That have arcing or suddenly moving parts, are shielded or located so employees won't get burned or injured by the operation of the circuit breaker.
- Make sure fuses that have arcing or suddenly moving parts, are sheilded or located so employees won't get burned or injured by the operation of the fuses.

Notes