APPLICATIONS MANUAL
FOR THE REVISED NIOSH LIFTING EQUATION

Thomas R. Waters, Ph.D.
Vern Putz-Anderson, Ph.D.
Arun Garg, Ph.D.

U.S. DEPARTMENT OF HEALTH AND HUMAN SERVICES
Public Health Service
Centers for Disease Control and Prevention
National Institute for Occupational Safety and Health
Division of Biomedical and Behavioral Science
Cincinnati, Ohio 45226

January 1994

DISCLAIMER

Mention of the name of any company or product does not constitute endorsement by the National Institute for Occupational Safety and Health.

DHHS (NIOSH) Publication No. 94-110

For public sale by:

U.S. Department of Commerce
Technology Administration
National Technical Information Service (NTIS)
5285 Port Royal Road, Springfield, VA 22161

Ask for PB94-176930

Please call (703) 487-4650 for regular service.
Please call (800) 553-NTIS for rush service.

Price is double for addressees outside of the U.S., Canada, and Mexico.

Further ordering information on last page.

ACKNOWLEDGEMENTS

We wish to especially acknowledge the efforts of Arun Garg, Ph.D., Professor of Industrial and Systems Engineering, University of Wisconsin-Milwaukee, who served as the chief technical consultant to NIOSH in the preparation of this document. We also wish to acknowledge the technical assistance of M.M. Ayoub, Ph.D., Don B. Chaffin, Ph.D., Jerome Congleton, Ph.D., Jeffrey Fernandez, Ph.D., Colin Drury, Ph.D., Stephan Konz, Ph.D., Suzanne Rodgers, Ph.D., and Roger Stephens, Ph.D.

The comments and reviews provided by other NIOSH personnel are gratefully acknowledged. They include Steven Sauter, Ph.D. and Dan Habes of the Division of Biomedical and Behavioral Science, and Lawrence J. Fine, M.D., M.P.H. of the Division of Surveillance, Hazard Evaluations, and Field Studies. We also wish to extend our appreciation to Mr. Richard Carlson of the Division of Training and Manpower Development for the illustrations contained in this document. We sincerely appreciate the encouragement and support of Dr. Janet C. Haartz, Director, Division of Biomedical and Behavioral Science.

FOREWORD

This Manual was developed to provide users of the revised NIOSH lifting equation (1991 version) with methods for accurately applying the lifting equation to a variety of lifting tasks. All necessary terms, definitions, and data requirements for the revised equation are provided in Section 1. Procedures for analyzing single-task and multi-task lifting jobs are described in Section 2. A series of ten lifting tasks is included in Section 3 to illustrate application of the procedure. For each task, a brief **job description** is provided, followed by a **job analysis**, and a **hazard assessment**, including a completed worksheet. Suggestions for redesign of the task are also provided.

The rationale and supporting criteria for the development of the revised NIOSH lifting equation are described in a journal article, *Revised NIOSH Equation for the Design and Evaluation of Manual Lifting Tasks*, by T. Waters, V. Putz-Anderson, A. Garg, and L. Fine, *Ergonomics* 1993. [See Appendix I]. The revised equation reflects research findings published subsequent to the publication of the original NIOSH equation (1981) and includes consideration of additional components of lifting tasks such as asymmetrical lifting and quality of hand-container couplings as well as a larger range of work durations and lifting frequencies than did the 1981 equation. It must be noted that application of this equation is limited to those conditions for which it was designed. It does not, for example, address such task factors as one-handed lifting, lifting extremely hot or cold objects, or factors that may increase the risk of a slip or fall and other non-lifting components of job tasks. A complete list of work conditions which are ***not*** covered by the 1991 equation is presented in Section 1.2 on page 9 of this Manual. Finally, it should be recognized that all methods require validation. Appropriate studies for the validation of this equation must be conducted to determine how effective these procedures are in reducing the morbidity associated with manual materials handling.

The equation was designed to assist in the identification of ergonomic solutions for reducing the physical stresses associated with manual lifting. It is our hope that this Manual (1) will assist occupational safety and health practioners in evaluating lifting tasks and reducing the incidence of low back injuries in workers, and (2) also serve to stimulate further research and debate on the prevention of low back pain, one of the most costly occupational health problems facing our nation.

Janet C. Haartz, Ph.D.
Director, Division of
Biomedical and Behavioral Science

TABLE OF CONTENTS

ACKNOWLEDGEMENTS iii

LIST of FIGURES viii

LIST of TABLES ix

INTRODUCTION 1

1. THE REVISED LIFTING EQUATION 4
1.1 Definition of Terms 4
1.1.1 Recommended Weight Limit (RWL) . . . 4
1.1.2. Lifting Index (LI) 4
1.1.2. Terminology and Data Definitions 5
1.2. Lifting Task Limitations 9
1.3. The Equation and Its Function 12
1.3.1. Horizontal Component 14
1.3.2. Vertical Component 17
1.3.3. Distance Component 18
1.3.4. Asymmetry Component 19
1.3.5. Frequency Component 22
1.3.6. Coupling Component 28
1.4. The Lifting Index (LI) 33
1.4.1. Using the RWL and LI to Guide Ergonomic Design 33
1.4.2. Rationale and Limitations for LI 34
1.4.3. Job-Related Intervention Strategy 34

2. PROCEDURES FOR ANALYZING LIFTING JOBS 36
2.1. Options 36
2.1.1. Rationale for Determining Significant Control 36
2.1.2. Rationale for Multi-task Analysis Procedure 37
2.2. Collect Data (Step 1) 40
2.3. Single-Task Assessment (Step 2) 43
2.4. Multi-Task Procedure 43

2.4.1. Compute the FIRWL for Each Task . . 44
2.4.2. Compute the STRWL for Each Task . . 44
2.4.3. Compute the FILI for Each Task 44
2.4.4. Compute the STLI for Each Task 45
2.4.5. Compute the CLI for the Job 45

3. EXAMPLE PROBLEMS 48
3.1. How to Use the Example Problems 48
3.2. Jobs Performed a Few Times Per Shift 53
3.2.1. Loading Punch Press Stock, Example 1 53
3.2.2. Loading Supply Rolls, Example 2 59
3.2.3. Loading Bags Into A Hopper, Example 3 65
3.3. Single Task, Performed Repetitively 69
3.3.1. Package Inspection, Example 4 69
3.3.2. Dish-Washing Machine Unloading, Example 5 73
3.3.3. Product Packaging I, Example 6 79
3.4. Repetitive Multi-Task, Short-Duration 84
3.4.1. Depalletizing Operation, Example 7 . . 84
3.4.2. Handling Cans of Liquid, Example 8 . 91
3.5. Repetitive Multi-Task, Long-Duration (> 2 hrs) 99
3.5.1. Product Packaging II, Example 9 99
3.5.2. Warehouse Order Filling, Example 10 105

GLOSSARY 113

REFERENCES 118

APPENDIX I 121

LIST of FIGURES

Figure 1 Graphic Representation of Hand Location 7
Figure 2 Graphic Representation of Asymmetry Angle (A) 8
Figure 3 Single Task Job Analysis Worksheet 41
Figure 4 Multi-Task Job Analysis Worksheet 42
Figure 5 Loading Punch Press Stock, Example 1 54
Figure 6 Job Analysis Worksheet, Example 1 56
Figure 7 Modified Job Analysis Worksheet, Example 1 . . 58
Figure 8 Loading Supply Rolls, Example 2 60
Figure 9 Job Analysis Worksheet, Example 2 61
Figure 10 Modified Job Analysis Worksheet, Example 2 . . . 64
Figure 11 Loading Bags Into Hopper, Example 3 66
Figure 12 Job Analysis Worksheet, Example 3 68
Figure 13 Package Inspection, Example 4 70
Figure 14 Job Analysis Worksheet, Example 4 71
Figure 15 Dish-Washing Machine Unloading, Example 5 . . 74
Figure 16 Job Analysis Worksheet, Example 5 75
Figure 17 Modified Job Analysis Worksheet, Example 5 . . 78
Figure 18 Packaging I, Example 6 80
Figure 19 Job Analysis Worksheet, Example 6 81
Figure 20 Modified Job Analysis Worksheet, Example 6 . . . 83
Figure 21 Depalletizing Operation, Example 7 85
Figure 22 Job Analysis Worksheet, Example 7 87
Figure 23 Handling Cans of Liquid, Example 8 92
Figure 24 Job Analysis Worksheet, Example 8 96
Figure 25 Product Packaging II, Example 9 100
Figure 26 Job Analysis Worksheet, Example 9 101
Figure 27 Warehouse Order Filling, Example 10 106
Figure 28 Job Analysis Worksheet, Example 10 108

LIST of TABLES

Table 1 Horizontal Multiplier 16
Table 2 Vertical Multiplier 18
Table 3 Distance Multiplier 20
Table 4 Asymmetric Multiplier 22
Table 5 Frequency Multiplier Table (FM) 26
Table 6 Hand-to-Container Coupling Classification 29
Table 7 Coupling Multiplier 31
Table 1 Horizontal Multiplier Table (HM) 51
Table 2 Vertical Multiplier Table (VM) 51
Table 3 Distance Multiplier Table (DM) 51
Table 4 Asymmetric Multiplier Table (AM) 51
Table 5 Frequency Multiplier Table (FM) 51
Table 7 Coupling Multiplier Table (CM) 51
Table 8 General Design/Redesign Suggestions 52

INTRODUCTION

Low back pain (LBP) and injuries attributed to manual lifting activities continue as one of the leading occupational health and safety issues facing preventive medicine. Despite efforts at control, including programs directed at both workers and jobs, work-related back injuries still account for a significant proportion of human suffering and economic cost to this nation. The scope of the problem was summarized in a report entitled *Back Injuries*, prepared by the Department of Labor's Bureau of Labor Statistics [DOL(BLS)], Bulletin 2144, published in 1982.

The DOL's conclusions are consistent with current workers' compensation data indicating that "injuries to the back are one of the more common and costly types of work-related injuries" (National Safety Council, 1990). According to the DOL report, back injuries accounted for nearly 20% of all injuries and illnesses in the workplace, and nearly 25% of the annual workers' compensation payments. A more recent report by the National Safety Council (1990) indicated that overexertion was the most common cause of occupational injury, accounting for 31% of all injuries. The back, moreover, was the body part most frequently injured (22% of 1.7 million injuries) and the most costly to workers' compensation systems.

More than ten years ago, the National Institute for Occupational Safety and Health (NIOSH) recognized the growing problem of work-related back injuries and published the *Work Practices Guide for Manual Lifting* (NIOSH WPG, 1981). The NIOSH WPG (1981) contained a summary of the lifting-related literature before 1981; analytical procedures and a lifting equation for calculating a recommended weight for specified two-handed, symmetrical lifting tasks; and an approach for controlling the hazards of low back injury from manual lifting. The approach to hazard control was coupled to the Action Limit (AL), a resultant term that denoted the recommended weight derived from the lifting equation.

In 1985, the National Institute for Occupational Safety and Health (NIOSH) convened an ad hoc committee of experts who reviewed the current literature on lifting, including the NIOSH WPG (1981).[1] The literature review was summarized in a document entitled *Scientific Support Documentation for the Revised 1991 NIOSH Lifting Equation: Technical Contract Reports, May 8, 1991*, which is available from the National Technical Information Service [NTIS No. PB-91-226-274]. The literature summary contains updated information on the physiological, biomechanical, psychophysical, and epidemiological aspects of manual lifting. Based on the results of the literature review, the ad hoc committee recommended criteria for defining the lifting capacity of healthy workers. The committee used the criteria to formulate the revised lifting equation. The equation was publicly presented in 1991 by NIOSH staff at a national conference in Ann Arbor, Michigan entitled *A National Strategy for Occupational Musculoskeletal Injury Prevention -- Implementation Issues and Research Needs.*[2] Subsequently, NIOSH staff developed the documentation for the equation and played a prominent role in recommending methods for interpreting the results of the lifting equation.

The revised lifting equation reflects new findings and provides methods for evaluating asymmetrical lifting tasks, and lifts of objects with less than optimal couplings between the object and the worker's hands. The revised lifting equation also provides guidelines for a more diverse range of lifting tasks than the earlier equation (NIOSH WPG, 1981).

The rationale and criterion for the development of the revised

---

[1] The ad hoc 1991 NIOSH Lifting Committee members included: M.M. Ayoub, Donald B. Chaffin, Colin G. Drury, Arun Garg, and Suzanne Rodgers. NIOSH representatives included Vern Putz-Anderson and Thomas R. Waters.

[2] For this document, the revised 1991 NIOSH lifting equation will be identified simply as "the revised lifting equation." The abbreviation WPG (1981) will continue to be used as the reference to the earlier NIOSH lifting equation, which was documented in a publication entitled *Work Practices Guide for Manual Lifting* (1981).

NIOSH lifting equation are provided in a separate journal article entitled: *Revised NIOSH Equation for the Design and Evaluation of Manual Lifting Tasks*, by Waters, Putz-Anderson, Garg, and Fine, 1993. [Appendix I]. We suggest that those practitioners who wish to achieve a better understanding of the data and decisions that were made in formulating the revised equation consult the article by Waters *et al.*, 1993. This article provides an explanation of the selection of the biomechanical, physiological, and psychophysical criterion, as well as a description of the derivation of the individual components of the revised lifting equation. For those individuals, however, who are primarily concerned with the use and application of the revised lifting equation, the present document provides a more complete description of the method and limitations for using the revised equation than does the article by Waters *et al.* 1993. This document also provides a complete set of examples.

Although the revised lifting equation has not been fully validated, the recommended weight limits derived from the revised equation are consistent with, or lower than, those generally reported in the literature (Waters *et al.*, 1993, Tables 2, 4, and 5). Moreover, the proper application of the revised equation is more likely to protect healthy workers for a wider variety of lifting tasks than methods that rely only a single task factor or single criterion.

Finally, it should be stressed that the NIOSH lifting equation is only one tool in a comprehensive effort to prevent work-related low back pain and disability. [Other approaches to prevention are described elsewhere (ASPH/NIOSH, 1986)]. Moreover, lifting is only one of the causes of work-related low back pain and disability. Other causes which have been hypothesized or established as risk factors include whole body vibration, static postures, prolonged sitting, and direct trauma to the back. Psychosocial factors, appropriate medical treatment, and job demands (past and present) also may be particularly important in influencing the transition of acute low back pain to chronic disabling pain.

1. THE REVISED LIFTING EQUATION

This section provides the technical information for using the revised lifting equation to evaluate a variety of two-handed manual lifting tasks. Definitions, restrictions/limitations, and data requirements for the revised lifting equation are also provided.

1.1 Definition of Terms

1.1.1 Recommended Weight Limit (RWL)

The **RWL** is the principal product of the revised NIOSH lifting equation. The RWL is defined for a specific set of task conditions as the weight of the load that nearly all healthy workers could perform over a substantial period of time (e.g., up to 8 hours) without an increased risk of developing lifting-related LBP. By ***healthy workers***, we mean workers who are free of adverse health conditions that would increase their risk of musculoskeletal injury.

The **RWL** is defined by the following equation:

$$RWL = LC \times HM \times VM \times DM \times AM \times FM \times CM$$

A detailed description of the individual components of the equation are provided in Section 1.3 on pages 12-13.

1.1.2. Lifting Index (LI)

The **LI** is a term that provides a relative estimate of the level of physical stress associated with a particular manual lifting task. The estimate of the level of physical stress is defined by the relationship of the weight of the load lifted and the recommended weight limit.

The LI is defined by the following equation:

$$LI = \frac{\text{Load Weight}}{\text{Recommended Weight Limit}} = \frac{L}{RWL}$$

1.1.2. Terminology and Data Definitions

The following list of brief definitions is useful in applying the revised NIOSH lifting equation. For detailed descriptions of these terms, refer to the individual sections where each is discussed. Methods for measuring these variables and examples are provided in Sections 1 and 2.

Lifting Task	Defined as the act of manually grasping an object of definable size and mass with two hands, and vertically moving the object without mechanical assistance.
Load Weight (L)	Weight of the object to be lifted, in pounds or kilograms, including the container.
Horizontal Location (H)	Distance of the hands away from the mid-point between the ankles, in inches or centimeters (measure at the origin and destination of lift). See Figure 1.
Vertical Location (V)	Distance of the hands above the floor, in inches or centimeters (measure at the origin and destination of lift). See Figure 1.
Vertical Travel Distance (D)	Absolute value of the difference between the vertical heights at the destination and origin of the lift, in inches or centimeters.
Asymmetry Angle (A)	Angular measure of how far the ***object*** is displaced from the front (mid-sagittal plane) of the worker's body at the beginning or ending of the lift, in

degrees (measure at the origin and destination of lift). See Figure 2. The asymmetry angle is defined by the location of the load relative to the worker's mid-sagittal plane, as defined by the neutral body posture, rather than the position of the feet or the extent of body twist.

Neutral Body Position — Describes the position of the body when the hands are directly in front of the body and there is minimal twisting at the legs, torso, or shoulders.

Lifting Frequency (F) — Average number of lifts per minute over a 15 minute period.

Lifting Duration — Three-tiered classification of lifting duration specified by the distribution of work-time and recovery-time (work pattern). Duration is classified as either short (1 hour), moderate (1-2 hours), or long (2-8 hours), depending on the work pattern.

Coupling Classification — Classification of the quality of the hand-to-object coupling (e.g., handle, cut-out, or grip). Coupling quality is classified as good, fair, or poor.

Significant Control — Significant control is defined as a condition requiring ***precision placement*** of the load at the destination of the lift. This is usually the case when (1) the worker has to re-grasp the load near the destination of the lift, or (2) the worker has to momentarily hold the object at the destination, or (3) the worker has to carefully position or guide the load at the destination.

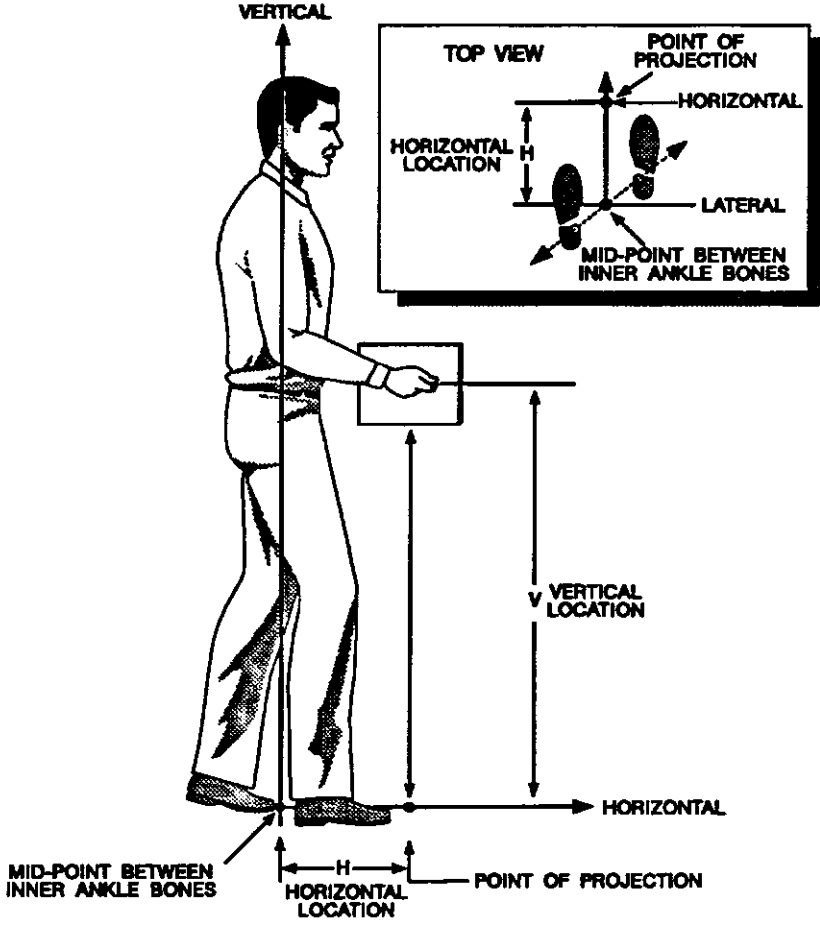

Figure 1 Graphic Representation of Hand Location

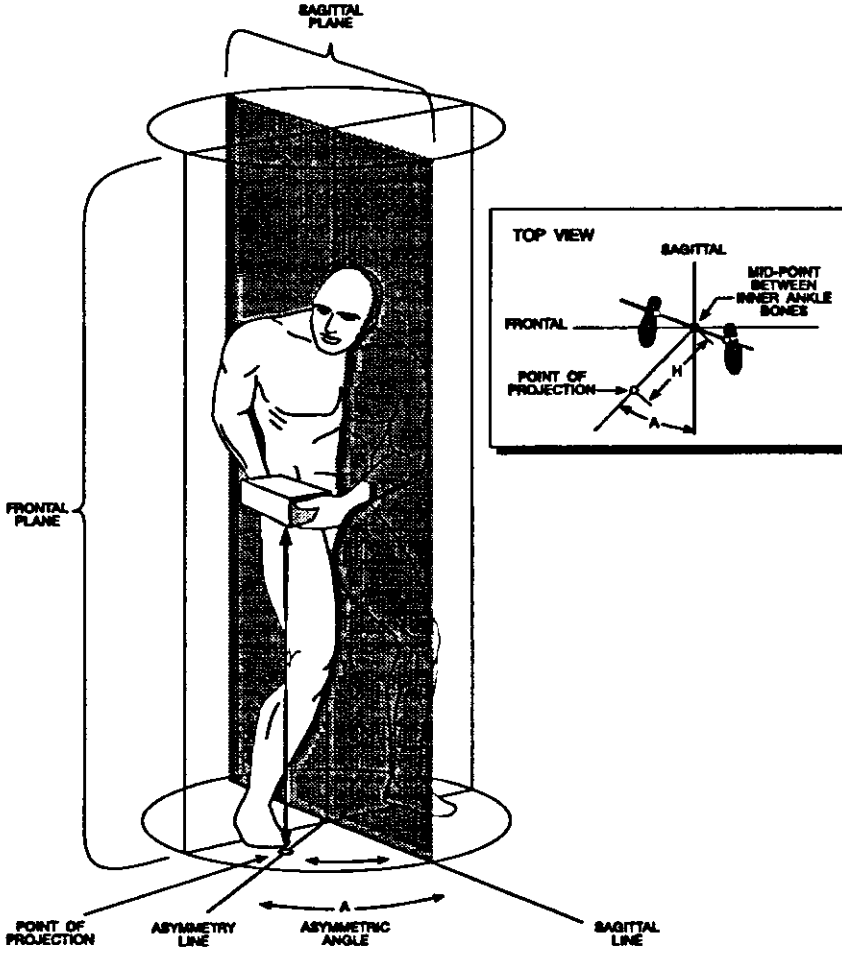

Figure 2 Graphic Representation of Angle of Asymmetry (A)

1.2. Lifting Task Limitations

The lifting equation is a tool for assessing the physical stress of two-handed manual lifting tasks. As with any tool, its application is limited to those conditions for which it was designed. Specifically, the lifting equation was designed to meet specific lifting-related criteria that encompass biomechanical, work physiology, and psychophysical assumptions and data, identified above. To the extent that a given lifting task accurately reflects these underlying conditions and criteria, this lifting equation may be appropriately applied.

The following list identifies a set of work conditions in which the application of the lifting equation could either under- or over-estimate the extent of physical stress associated with a particular work-related activity. Each of the following task limitations also highlight research topics in need of further research to extend the application of the lifting equation to a greater range of real world lifting tasks.

1. The revised NIOSH lifting equation is based on the assumption that manual handling activities other than lifting are minimal and do not require significant energy expenditure, especially when repetitive lifting tasks are performed. Examples of non-lifting tasks include holding, pushing, pulling, carrying, walking, and climbing. If such non-lifting activities account for more than about 10% of the total worker activity, then measures of workers' energy expenditures and/or heart rate may be required to assess the metabolic demands of the different tasks. The equation will still apply if there is a small amount of holding and carrying, but carrying should be limited to one or two steps and holding should not exceed a few seconds. For more information on assessing metabolic demand, see Garg *et al.* (1978) or Eastman Kodak (1986) .

2. The revised lifting equation does not include task factors to account for unpredicted conditions, such as unexpectedly heavy loads, slips, or falls. Additional biomechanical analyses may be required to assess the physical stress on joints that occur from traumatic incidents. Moreover, if the environment is unfavorable (e.g., temperatures or humidity significantly outside the range of 19° to 26°C [66° to 79°F] or 35% to 50%, respectively), independent metabolic assessments would be needed to gauge the effects of these variables on heart rate and energy consumption.

3. The revised lifting equation was not designed to assess tasks involving one-handed lifting, lifting while seated or kneeling, or lifting in a constrained or restricted work space.[3] The equation also does not apply to lifting unstable loads. For purposes of applying the equation, an unstable load would be defined as an object in which the location of the center of mass varies significantly during the lifting activity, such as some containers of liquid or incompletely filled bags, etc. The equation does not apply to lifting of wheelbarrows, shoveling, or high-speed lifting.[4] For such task conditions, independent and task specific biomechanical, metabolic, and psychophysical assessments may be needed. For information on other assessment methods, refer to Eastman Kodak (1986), Ayoub and Mital (1989), Chaffin and Andersson (1991), or Snook and Ciriello (1991).

4. The revised lifting equation assumes that the worker/floor surface coupling provides at least a 0.4 (preferably 0.5) coefficient of static friction between the shoe sole and the working surface. An adequate worker/floor surface coupling is necessary when lifting to provide a firm footing and to control accidents and

---

[3] The research staff of the Bureau of Mines have published numerous studies on lifting while kneeling and in restricted workspaces (See Gallagher *et al.*, 1988; Gallagher and Unger, 1990; and, Gallagher, 1991).

[4] Although lifting speed is difficult to judge, a high speed lift would be equivalent to a speed of about 30 inches/second. For comparison purposes, a lift from the floor to a table-top that is completed in less than about 1 second would be considered high speed.

injuries resulting from foot slippage. A 0.4 to 0.5 coefficient of static friction is comparable to the friction found between a smooth, dry floor and the sole of a clean, dry leather work shoe (nonslip type). Independent biomechanical modeling may be used to account for variations in the coefficient of friction.

5. The revised lifting equation assumes that lifting and lowering tasks have the same level of risk for low back injuries (i.e. that lifting a box from the floor to a table is as hazardous as lowering the same box from a table to the floor). This assumption may not be true if the worker actually drops the box rather than lowering it all the way to the destination. Independent metabolic, biomechanical, or psychophysical assessments may be needed to assess worker capacity for various lowering conditions. (See references provided above.)

In summary, the Revised NIOSH Lifting Equation does not apply if any of the following occur:

- Lifting/lowering with one hand
- Lifting/lowering for over 8 hours
- Lifting/lowering while seated or kneeling
- Lifting/lowering in a restricted work space
- Lifting/lowering unstable objects
- Lifting/lowering while carrying, pushing or pulling
- Lifting/lowering with wheelbarrows or shovels
- Lifting/lowering with ***high speed*** motion (faster than about 30 inches/second)
- Lifting/lowering with unreasonable foot/floor coupling (< 0.4 coefficient of friction between the sole and the floor)

- Lifting/lowering in an unfavorable environment (i.e., temperature significantly outside 66-79° F (19-26° C) range; relative humidity outside 35-50% range)

For those lifting tasks in which the application of the revised lifting equation is not appropriate, a more comprehensive ergonomic evaluation may be needed to quantify the extent of other physical stressors, such as prolonged or frequent non-neutral back postures or seated postures, cyclic loading (whole body vibration), or unfavorable environmental factors (e.g., extreme heat, cold, humidity, etc.).

Any of the above factors, alone or in combination with manual lifting, may exacerbate or initiate the onset of low back pain.

1.3. The Equation and Its Function

The revised lifting equation for calculating the Recommended Weight Limit (RWL) is based on a multiplicative model that provides a weighting for each of six task variables. The weightings are expressed as coefficients that serve to decrease the load constant, which represents the maximum recommended load weight to be lifted under ideal conditions. The RWL is defined by the following equation:

$$RWL = LC \times HM \times VM \times DM \times AM \times FM \times CM$$

Where:

		METRIC	U.S. CUSTOMARY
Load Constant	LC	23 kg	51 lb
Horizontal Multiplier	HM	(25/H)	(10/H)
Vertical Multiplier	VM	1-(.003 |V-75|)	1-(.0075 |V-30|)
Distance Multiplier	DM	.82 + (4.5/D)	.82 + (1.8/D)
Asymmetric Multiplier	AM	1-(.0032A)	1-(.0032A)
Frequency Multiplier	FM	From Table 5	From Table 5
Coupling Multiplier	CM	From Table 7	From Table 7

The term ***task variables*** refers to the measurable task descriptors (i.e., H, V, D, A, F, and C); whereas, the term ***multipliers*** refers to the reduction coefficients in the equation (i.e., HM, VM, DM, AM, FM, and CM).

Each multiplier should be computed from the appropriate formula, but in some cases it will be necessary to use linear interpolation to determine the value of a multiplier, especially when the value of a variable is not directly available from a table. For example, when the measured frequency is not a whole number, the appropriate multiplier must be interpolated between the frequency values in the table for the two values that are closest to the actual frequency.

A brief discussion of the task variables, the restrictions, and the associated multiplier for each component of the model is presented in the following sections.

1.3.1. Horizontal Component

1.3.1.1. Definition and Measurement

Horizontal Location (H) is measured from the mid-point of the line joining the inner ankle bones to a point projected on the floor directly below the mid-point of the hand grasps (i.e., load center), as defined by the large middle knuckle of the hand (Figure 1). Typically, the worker's feet are not aligned with the mid-sagittal plane, as shown in Figure 1, but may be rotated inward or outward. If this is the case, then the mid-sagittal plane is defined by the worker's neutral body posture as defined above.

If significant control is required at the destination (i.e., precision placement), then H should be measured at both the origin and destination of the lift.

Horizontal Location (H) should be measured. In those situations where the H value can not be measured, then H may be approximated from the following equations:

Metric [All distances in cm]	U.S. Customary [All distances in inches]
$H = 20 + W/2$ for $V \geq 25$ cm	$H = 8 + W/2$ for $V \geq 10$ inches
$H = 25 + W/2$ for $V < 25$ cm	$H = 10 + W/2$ for $V < 10$ inches

Where: W is the width of the container in the sagittal plane and V is the vertical location of the hands from the floor.

1.3.1.2. Horizontal Restrictions

If the horizontal distance is less than 10 inches (25 cm), then H is set to 10 inches (25 cm). Although objects can be carried or held closer than 10 inches from the ankles, most objects that are closer than this cannot be lifted without encountering interference from

the abdomen or hyperextending the shoulders. While 25 inches (63 cm) was chosen as the maximum value for H, it is probably too large for shorter workers, particularly when lifting asymmetrically. Furthermore, objects at a distance of more than 25 inches from the ankles normally cannot be lifted vertically without some loss of balance.

1.3.1.3. Horizontal Multiplier

The Horizontal Multiplier (HM) is 10/H, for H measured in inches, and HM is 25/H, for H measured in centimeters. ***If H is less than or equal to 10 inches (25 cm)***, then the multiplier is 1.0. HM decreases with an increase in H value. The multiplier for H is reduced to 0.4 when H is 25 inches (63 cm). If H is greater than 25 inches, then HM = 0. The HM value can be computed directly or determined from Table 1.

Table 1
Horizontal Multiplier

H	HM	H	HM
in		cm	
≤10	1.00	≤25	1.00
11	.91	28	.89
12	.83	30	.83
13	.77	32	.78
14	.71	34	.74
15	.67	36	.69
16	.63	38	.66
17	.59	40	.63
18	.56	42	.60
19	.53	44	.57
20	.50	46	.54
21	.48	48	.52
22	.46	50	.50
23	.44	52	.48
24	.42	54	.46
25	.40	56	.45
>25	.00	58	.43
		60	.42
		63	.40
		>63	.00

1.3.2. Vertical Component

1.3.2.1. Definition and Measurement

Vertical Location (V) is defined as the vertical height of the hands above the floor. V is measured vertically from the floor to the mid-point between the hand grasps, as defined by the large middle knuckle. The coordinate system is illustrated in Figure 1 (page 7).

1.3.2.2. Vertical Restrictions

The vertical location (V) is limited by the floor surface and the upper limit of vertical reach for lifting (i.e.,70 inches or 175 cm). The vertical location should be measured at the origin and the destination of the lift to determine the travel distance (D).

1.3.2.3. Vertical Multiplier

To determine the Vertical Multiplier (VM), the absolute value or deviation of V from an optimum height of 30 inches (75 cm) is calculated. A height of 30 inches above floor level is considered "knuckle height" for a worker of average height (66 inches or 165 cm). The Vertical Multiplier (VM) is $(1-(.0075\,|V-30|))$ for V measured in inches, and VM is $(1-(.003\,|V-75|))$, for V measured in centimeters.

When V is at 30 inches (75 cm), the vertical multiplier (VM) is 1.0. The value of VM decreases linearly with an increase or decrease in height from this position. At floor level, VM is 0.78, and at 70 inches (175 cm) height VM is 0.7. If V is greater than 70 inches, then VM = 0. The VM value can be computed directly or determined from Table 2.

Table 2
Vertical Multiplier

V	VM	V	VM
in		cm	
0	.78	0	.78
5	.81	10	.81
10	.85	20	.84
15	.89	30	.87
20	.93	40	.90
25	.96	50	.93
30	1.00	60	.96
35	.96	70	.99
40	.93	80	.99
45	.89	90	.96
50	.85	100	.93
55	.81	110	.90
60	.78	120	.87
65	.74	130	.84
70	.70	140	.81
>70	.00	150	.78
		160	.75
		170	.72
		175	.70
		>175	.00

1.3.3. Distance Component

1.3.3.1. Definition and Measurement

The **Vertical Travel Distance** variable (D) is defined as the vertical travel distance of the hands between the origin and destination of the lift. For lifting, D can be computed by subtracting the vertical location (V) at the origin of the lift from the corresponding V at

the destination of the lift (i.e., D is equal to V at the destination minus V at the origin). For a lowering task, D is equal to V at the origin minus V at the destination.

1.3.3.2 Distance Restrictions

The variable (D) is assumed to be at least 10 inches (25 cm), and no greater than 70 inches [175 cm]. If the vertical travel distance is less than 10 inches (25 cm), then D should be set to the minimum distance of 10 inches (25 cm).

1.3.3.3 Distance Multiplier

The Distance Multiplier (DM) is (.82 + (1.8/D)) for D measured in inches, and DM is (.82 + (4.5/D)) for D measured in centimeters. For D less than 10 inches (25 cm) D is assumed to be 10 inches (25 cm), and DM is 1.0. The Distance Multiplier, therefore, decreases gradually with an increase in travel distance. The DM is 1.0 when D is set at 10 inches, (25 cm); DM is 0.85 when D = 70 inches (175 cm). Thus, DM ranges from 1.0 to 0.85 as the D varies from 0 inches (0 cm) to 70 inches (175 cm). The DM value can be computed directly or determined from Table 3.

1.3.4. Asymmetry Component

1.3.4.1. Definition and Measurement

Asymmetry refers to a lift that begins or ends outside the mid-sagittal plane as shown in Figure 2 on page 8. In general, asymmetric lifting should be avoided. If asymmetric lifting cannot be avoided, however, the recommended weight limits are significantly less than those limits used for symmetrical lifting.[5]

---

[5] It may not always be clear if asymmetry is an intrinsic element of the task or just a personal characteristic of the worker's lifting style. Regardless of the reason for the asymmetry, any observed asymmetric lifting should be considered an intrinsic element of the job design and should be considered in the assessment and subsequent redesign. Moreover, the design of the task should not rely on worker compliance, but rather the design should discourage or eliminate the need for asymmetric lifting.

Table 3
Distance Multiplier

D	DM	D	DM
in		cm	
≤10	1.00	≤25	1.00
15	.94	40	.93
20	.91	55	.90
25	.89	70	.88
30	.88	85	.87
35	.87	100	.87
40	.87	115	.86
45	.86	130	.86
50	.86	145	.85
55	.85	160	.85
60	.85	175	.85
70	.85	>175	.00
>70	.00		

An asymmetric lift may be required under the following task or workplace conditions:

1. The origin and destination of the lift are oriented at an angle to each another.

2. The lifting motion is across the body, such as occurs in swinging bags or boxes from one location to another.

3. The lifting is done to maintain body balance in obstructed workplaces, on rough terrain, or on littered floors.

4. Productivity standards require reduced time per lift.

The asymmetric angle (A), which is depicted graphically in Figure 2, is operationally defined as the angle between the asymmetry line and the mid-sagittal line. The ***asymmetry line*** is defined as the horizontal line that joins the mid-point between the inner ankle bones and the point projected on the floor directly below the mid-point of the hand grasps, as defined by the large middle knuckle.

The ***sagittal line*** is defined as the line passing through the mid-point between the inner ankle bones and lying in the mid-sagittal plane, as defined by the neutral body position (i.e., hands directly in front of the body, with no twisting at the legs, torso, or shoulders). Note: The asymmetry angle is not defined by foot position or the angle of torso twist, but by the location of the load relative to the worker's mid-sagittal plane.

In many cases of asymmetric lifting, the worker will pivot or use a step turn to complete the lift. Since this may vary significantly between workers and between lifts, we have assumed that no pivoting or stepping occurs. Although this assumption may overestimate the reduction in acceptable load weight, it will provide the greatest protection for the worker.

The asymmetry angle (A) must always be measured at the origin of the lift. If significant control is required at the destination, however, then angle A should be measured at both the origin and the destination of the lift.

1.3.4.2. Asymmetry Restrictions

The angle A is limited to the range from 0° to 135°. If A > 135°, then AM is set equal to zero, which results in a RWL of zero, or no load.

1.3.4.3. Asymmetric Multiplier

The Asymmetric Multiplier (AM) is 1-(.0032A). The AM has a maximum value of 1.0 when the load is lifted directly in front of

the body. The AM decreases linearly as the angle of asymmetry (A) increases. The range is from a value of 0.57 at 135° of asymmetry to a value of 1.0 at 0° of asymmetry (i.e., symmetric lift).

If A is greater than 135°, then AM = 0, and the load is zero. The AM value can be computed directly or determined from Table 4.

Table 4
Asymmetric Multiplier

A	AM
deg	
0	1.00
15	.95
30	.90
45	.86
60	.81
75	.76
90	.71
105	.66
120	.62
135	.57
>135	.00

1.3.5. Frequency Component

1.3.5.1 Definition and Measurement

The frequency multiplier is defined by (a) the number of lifts per minute (frequency), (b) the amount of time engaged in the lifting activity (duration), and (c) the vertical height of the lift from the floor. Lifting frequency (F) refers to the average number of lifts made per minute, as measured over a 15-minute period. Because

of the potential variation in work patterns, analysts may have difficulty obtaining an accurate or representative 15-minute work sample for computing the lifting frequency (F). If significant variation exists in the frequency of lifting over the course of the day, analysts should employ standard work sampling techniques to obtain a representative work sample for determining the number of lifts per minute. For those jobs where the frequency varies from session to session, each session should be analyzed separately, but the overall work pattern must still be considered. For more information, most standard industrial engineering or ergonomics texts provide guidance for establishing a representative job sampling strategy (e.g., Eastman Kodak Company, 1986).

1.3.5.2 Lifting Duration

Lifting duration is classified into three categories--short-duration, moderate-duration and long-duration. These categories are based on the pattern of continuous ***work-time*** and ***recovery-time*** (i.e., light work) periods. A continuous work-time period is defined as a period of uninterrupted work. Recovery-time is defined as the duration of light work activity following a period of continuous lifting. Examples of light work include activities such as sitting at a desk or table, monitoring operations, light assembly work, etc.

1. **Short-duration** defines lifting tasks that have a work duration of ***one hour or less***, followed by a recovery time equal to 1.2 times the work time [i.e., at least a 1.2 recovery-time to work-time ratio (RT/WT)].

For example, to be classified as short-duration, a 45-minute lifting job must be followed by at least a 54-minute recovery period prior to initiating a subsequent lifting session. If the required recovery time is not met for a job of one hour or less, and a subsequent lifting session is required, then the total lifting time must be combined to correctly determine the duration category. Moreover, if the recovery period does not meet the time requirement, it is disregarded for purposes of determining the appropriate duration category.

As another example, assume a worker lifts continuously for 30 minutes, then performs a light work task for 10 minutes, and then lifts for an additional 45-minute period. In this case, the recovery time between lifting sessions (10 minutes) is less than 1.2 times the initial 30-minute work time (36 minutes). Thus, the two work times (30 minutes and 45 minutes) must be added together to determine the duration. Since the total work time (75 minutes) exceeds 1 hour, the job is classified as moderate-duration. On the other hand, if the recovery period between lifting sessions was increased to 36 minutes, then the short-duration category would apply, which would result in a larger FM value.

2. **Moderate-duration** defines lifting tasks that have a duration of ***more than one hour, but not more than two hours***, followed by a recovery period of at least 0.3 times the work time [i.e., at least a 0.3 recovery-time to work-time ratio (RT/WT)].

For example, if a worker continuously lifts for 2 hours, then a recovery period of at least 36 minutes would be required before initiating a subsequent lifting session. If the recovery time requirement is not met, and a subsequent lifting session is required, then the total work time must be added together. If the total work time exceeds 2 hours, then the job must be classified as a long-duration lifting task.

3. **Long-duration** defines lifting tasks that have a duration of ***between two and eight hours***, with standard industrial rest allowances (e.g., morning, lunch, and afternoon rest breaks).

Note: No weight limits are provided for more than eight hours of work.

The difference in the required RT/WT ratio for the short-duration category (less than 1 hour), which is 1.2, and the moderate-duration category (1-2 hours), which is .3, is due to the difference in the magnitudes of the frequency multiplier values associated with each of the duration categories. Since the moderate-duration category results in larger reductions in the RWL than the short-

duration category, there is less need for a recovery period between sessions than for the short duration category. In other words, the short duration category would result in higher weight limits than the moderate duration category, so larger recovery periods would be needed.

1.3.5.3. Frequency Restrictions

Lifting frequency (F) for repetitive lifting may range from 0.2 lifts/min to a maximum frequency that is dependent on the vertical location of the object (V) and the duration of lifting (Table 5). Lifting above the maximum frequency results in a RWL of 0.0. (Except for the special case of discontinuous lifting discussed above, where the maximum frequency is 15 lifts/minute.)

1.3.5.4. Frequency Multiplier

The FM value depends upon the average number of lifts/min (F), the vertical location (V) of the hands at the origin, and the duration of continuous lifting. For lifting tasks with a frequency less than .2 lifts per minute, set the frequency equal to .2 lifts/minute. For infrequent lifting (i.e., F < .1 lift/minute), however, the recovery period will usually be sufficient to use the 1-hour duration category. The FM value is determined from Table 5.

Table 5
Frequency Multiplier Table (FM)

Frequency Lifts/min (F) ‡	Work Duration					
	≤ 1 Hour		>1 but ≤ 2 Hours		>2 but ≤ 8 Hours	
	V < 30†	V ≥ 30	V < 30	V ≥ 30	V < 30	V ≥ 30
≤0.2	1.00	1.00	.95	.95	.85	.85
0.5	.97	.97	.92	.92	.81	.81
1	.94	.94	.88	.88	.75	.75
2	.91	.91	.84	.84	.65	.65
3	.88	.88	.79	.79	.55	.55
4	.84	.84	.72	.72	.45	.45
5	.80	.80	.60	.60	.35	.35
6	.75	.75	.50	.50	.27	.27
7	.70	.70	.42	.42	.22	.22
8	.60	.60	.35	.35	.18	.18
9	.52	.52	.30	.30	.00	.15
10	.45	.45	.26	.26	.00	.13
11	.41	.41	.00	.23	.00	.00
12	.37	.37	.00	.21	.00	.00
13	.00	.34	.00	.00	.00	.00
14	.00	.31	.00	.00	.00	.00
15	.00	.28	.00	.00	.00	.00
>15	.00	.00	.00	.00	.00	.00

†Values of V are in inches. ‡For lifting less frequently than once per 5 minutes, set F = .2 lifts/minute.

1.3.5.5. Special Frequency Adjustment Procedure

A ***special procedure*** has been developed for determining the appropriate lifting frequency (F) for certain repetitive lifting tasks in which workers do not lift continuously during the 15 minute sampling period. This occurs when the work pattern is such that the worker lifts repetitively for a short time and then performs light work for a short time before starting another cycle. As long as the actual lifting frequency does not exceed 15 lifts per minute, the lifting frequency (F) may be determined for tasks such as this as follows:

1. Compute the total number of lifts performed for the 15 minute period (i.e., lift rate times work time).

2. Divide the total number of lifts by 15.

3. Use the resulting value as the frequency (F) to determine the frequency multiplier (FM) from Table 5.

For example, if the work pattern for a job consists of a series of cyclic sessions requiring 8 minutes of lifting followed by 7 minutes of light work, and the lifting rate during the work sessions is 10 lifts per minute, then the frequency rate (F) that is used to determine the frequency multiplier for this job is equal to (10 x 8)/15 or 5.33 lifts/minute. If the worker lifted continuously for more than 15 minutes, however, then the actual lifting frequency (10 lifts per minute) would be used.

When using this special procedure, the duration category is based on the magnitude of the recovery periods ***between*** work sessions, not ***within*** work sessions. In other words, if the work pattern is intermittent and the special procedure applies, then the intermittent recovery periods that occur during the 15-minute sampling period are ***not*** considered as recovery periods for purposes of determining the duration category. For example, if the work pattern for a manual lifting job was composed of repetitive cycles consisting of 1 minute of continuous lifting at a rate of 10 lifts/minute, followed

by 2 minutes of recovery, the correct procedure would be to adjust the frequency according to the special procedure [i.e., F = (10 lifts/minute x 5 minutes)/15 minutes = 50/15 = 3.4 lifts/minute.] The 2-minute recovery periods would not count towards the WT/RT ratio, however, and additional recovery periods would have to be provided as described above.

1.3.6. Coupling Component

1.3.6.1. Definition & Measurement

The nature of the hand-to-object coupling or gripping method can affect not only the maximum force a worker can or must exert on the object, but also the vertical location of the hands during the lift. A ***good*** coupling will reduce the maximum grasp forces required and increase the acceptable weight for lifting, while a ***poor*** coupling will generally require higher maximum grasp forces and decrease the acceptable weight for lifting.

The effectiveness of the coupling is not static, but may vary with the distance of the object from the ground, so that a good coupling could become a poor coupling during a single lift. The entire range of the lift should be considered when classifying hand-to-object couplings, with classification based on overall effectiveness. The analyst must classify the coupling as good, fair, or poor. The three categories are defined in Table 6. If there is any doubt about classifying a particular coupling design, the more stressful classification should be selected.

Table 6
Hand-to-Container Coupling Classification

GOOD	FAIR	POOR
1. For containers of optimal design, such as some boxes, crates, etc., a "Good" hand-to-object coupling would be defined as handles or hand-hold cut-outs of optimal design [see notes 1 to 3 below].	1. For containers of optimal design, a "Fair" hand-to-object coupling would be defined as handles or hand-hold cut-outs of less than optimal design [see notes 1 to 4 below].	1. Containers of less than optimal design or loose parts or irregular objects that are bulky, hard to handle, or have sharp edges [see note 5 below].
2. For loose parts or irregular objects, which are not usually containerized, such as castings, stock, and supply materials, a "Good" hand-to-object coupling would be defined as a comfortable grip in which the hand can be easily wrapped around the object [see note 6 below].	2. For containers of optimal design with no handles or hand-hold cut-outs or for loose parts or irregular objects, a "Fair" hand-to-object coupling is defined as a grip in which the hand can be flexed about 90 degrees [see note 4 below].	2. Lifting non-rigid bags (i.e., bags that sag in the middle).

1. An optimal handle design has .75 - 1.5 inches (1.9 to 3.8 cm) diameter, ≥ 4.5 inches (11.5 cm) length, 2 inches (5 cm) clearance, cylindrical shape, and a smooth, non-slip surface.

2. An optimal hand-hold cut-out has the following approximate characteristics: ≥ 1.5 inch (3.8 cm) height, 4.5 inch (11.5 cm) length, semi-oval shape, ≥ 2 inch (5 cm) clearance, smooth non-slip surface, and ≥ 0.25 inches (0.60 cm) container thickness (e.g., double thickness cardboard).

3. An optimal container design has ≤ 16 inches (40 cm) frontal length, ≤ 12 inches (30 cm) height, and a smooth non-slip surface.

4. A worker should be capable of clamping the fingers at nearly 90° under the container, such as required when lifting a cardboard box from the floor.

5. A container is considered less than optimal if it has a frontal length > 16 inches (40 cm), height > 12 inches (30 cm), rough or slippery surfaces, sharp edges, asymmetric center of mass, unstable contents, or requires the use of gloves. A loose object is considered bulky if the load cannot easily be balanced between the hand-grasps.

6. A worker should be able to comfortably wrap the hand around the object without causing excessive wrist deviations or awkward postures, and the grip should not require excessive force.

1.3.6.2. Coupling Multiplier

Based on the coupling classification and vertical location of the lift, the Coupling Multiplier (CM) is determined from Table 7.

Table 7
Coupling Multiplier

Coupling Type	Coupling Multiplier	
	V< 30 inches (75 cm)	V ≥ 30 inches (75 cm)
Good	1.00	1.00
Fair	0.95	1.00
Poor	0.90	0.90

The following decision tree may be helpful in classifying the hand-to-object coupling.

Decision Tree for Coupling Quality

Object Lifted

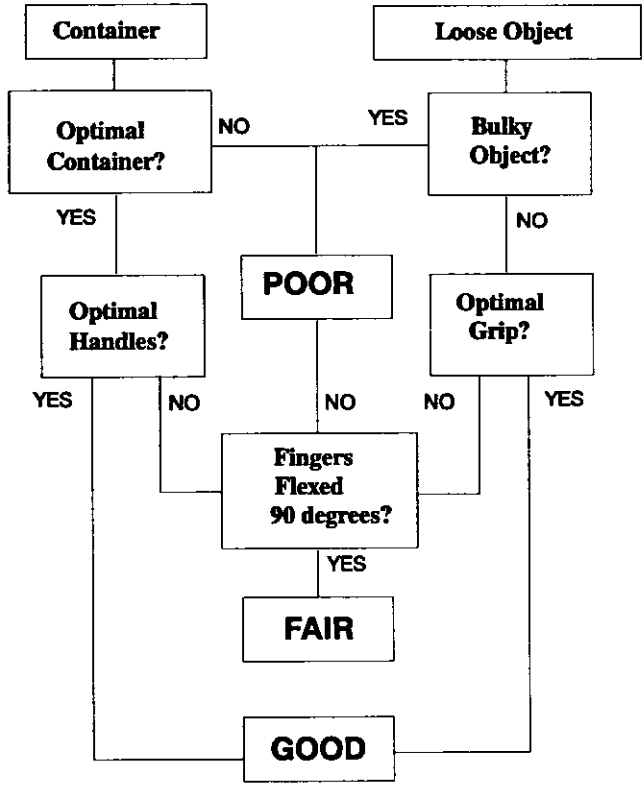

1.4. The Lifting Index (LI)

As defined earlier, the Lifting Index (LI) provides a relative estimate of the physical stress associated with a manual lifting job.

$$LI = \frac{\text{Load Weight}}{\text{Recommended Weight Limit}} = \frac{L}{RWL}$$

Where **Load Weight (L)** = weight of the object lifted (lbs or kg).

1.4.1. Using the RWL and LI to Guide Ergonomic Design

The recommended weight limit (RWL) and lifting index (LI) can be used to guide ergonomic design in several ways:

(1) The individual multipliers can be used to identify specific job-related problems. The relative magnitude of each multiplier indicates the relative contribution of each task factor (e.g., horizontal, vertical, frequency, etc.)

(2) The RWL can be used to guide the redesign of existing manual lifting jobs or to design new manual lifting jobs. For example, if the task variables are fixed, then the maximum weight of the load could be selected so as not to exceed the RWL; if the weight is fixed, then the task variables could be optimized so as not to exceed the RWL.

(3) The LI can be used to estimate the relative magnitude of physical stress for a task or job. The greater the LI, the smaller the fraction of workers capable of safely sustaining the level of activity. Thus, two or more job designs could be compared.

(4) The LI can be used to prioritize ergonomic redesign. For example, a series of suspected hazardous jobs could be rank ordered according to the LI and a control strategy could be developed according to the rank ordering (i.e., jobs with lifting

indices above 1.0 or higher would benefit the most from redesign).

1.4.2. Rationale and Limitations for LI

The NIOSH Recommended Weight Limit (RWL) equation and Lifting Index (LI) are based on the concept that the risk of lifting-related low back pain increases as the demands of the lifting task increase. In other words, as the magnitude of the LI increases, (1) the level of the risk for a given worker would be increased, and (2) a greater percentage of the workforce is likely to be at risk for developing lifting-related low back pain. The shape of the risk function, however, is not known. Without additional data showing the relationship between low back pain and the LI, it is impossible to predict the magnitude of the risk for a given individual or the exact percent of the work population who would be at an elevated risk for low back pain.

To gain a better understanding of the rationale for the development of the RWL and LI, consult the paper entitled *Revised NIOSH Equation for the Design and Evaluation of Manual Lifting Tasks* by Waters, Putz-Anderson, Garg, and Fine (1993) (Appendix I). This article provides a discussion of the criteria underlying the lifting equation and of the individual multipliers. This article also identifies both the assumptions and uncertainties in the scientific studies that associate manual lifting and low back injuries.

1.4.3. Job-Related Intervention Strategy

The lifting index may be used to identify potentially hazardous lifting jobs or to compare the relative severity of two jobs for the purpose of evaluating and redesigning them. From the NIOSH perspective, it is likely that lifting tasks with a LI > 1.0 pose an increased risk for lifting-related low back pain for some fraction of the workforce (Waters *et al.*, 1993). Hence, the goal should be to design all lifting jobs to achieve a LI of 1.0 or less.

Some experts believe, however, that worker selection criteria may be used to identify workers who can perform potentially stressful lifting tasks (i.e., lifting tasks that would exceed a LI of 1.0) without significantly increasing their risk of work-related injury (Chaffin and Anderson, 1984; Ayoub and Mital, 1989). Those selection criteria, however, must be based on research studies, empirical observations, or theoretical considerations that include job-related strength testing and/or aerobic capacity testing. Nonetheless, these experts agree that nearly all workers will be at an increased risk of a work-related injury when performing highly stressful lifting tasks (i.e., lifting tasks that would exceed a LI of 3.0). Also, ***informal*** or ***natural*** selection of workers may occur in many jobs that require repetitive lifting tasks. According to some experts, this may result in a unique workforce that may be able to work above a lifting index of 1.0, at least in theory, without substantially increasing their risk of low back injuries above the baseline rate of injury.

2. PROCEDURES FOR ANALYZING LIFTING JOBS

This section describes the procedures that should be followed to correctly assess the physical demands of a manual lifting job.

2.1. Options

Prior to the assessment, the analyst must determine (1) if the job should be analyzed as a single-task or multi-task manual lifting job, and (2) if significant control is required at the destination of the lift.

A single-task manual lifting job is defined as a lifting job in which the task variables do not significantly vary from task to task, or only one task is of interest (e.g., worst case analysis). This may be the case if the effects of the other tasks on strength, localized muscle fatigue, or whole-body fatigue do not differ significantly from the worst case task.

On the other hand, multi-task manual lifting jobs, which are defined as jobs in which there are significant differences in task variables between tasks, are more difficult to analyze because each task must be analyzed separately. Therefore, a specialized procedure is used to analyze multi-task manual lifting jobs.

2.1.1. Rationale for Determining Significant Control

When significant control of an object is required at the destination of a lift, the worker must apply a significant upward force to decelerate the object. Depending upon the velocity of the lift, this deceleration force may be as great as the force required to lift the object at the origin. Therefore, to insure that the appropriate RWL is computed for a lift that requires significant control at the destination, the RWL is calculated at ***both*** the origin and the destination of the lift, and the lower of the two values is used to assess the overall lift. The latter procedure is required if (1) the worker has to re-grasp the load near the destination of the

lift, (2) the worker has to momentarily hold the object at the destination, or (3) the worker has to position or guide the load at the destination. The purpose of calculating the RWL at both the origin and destination of the lift is to identify the most stressful location of the lift.

2.1.2. Rationale for Multi-task Analysis Procedure

The initial recommendation for analyzing the physical demands of multi-task manual lifting jobs was included in the NIOSH WPG (1981). The procedure was designed to determine the collective effects of all the tasks. The procedure included: (1) determining a frequency-weighted average for each task variable; (2) determining each of the four multipliers, the AL and the MPL, using the frequency-weighted average variables; and, (3) comparing the frequency-weighted average weight with the AL and MPL. The averaging approach, however, can mask the effects of hazardous task variables, resulting in an underestimation of the lifting hazard (Waters, 1991). For example, consider a multi-task job consisting of two separate tasks, each with a frequency of 1 lift/minute and vertical heights (V) of 0 and 60 inches. Although both tasks considered individually would have large penalties for the vertical height factor, when combined in this manner the frequency-weighted (average) V is 30 inches, which cancels the penalty for vertical height, resulting in no reduction in the recommended weight limit. Because of the potential inaccuracies that can occur when task variables are averaged for multi-task assessments, a new multi-task method was developed. The method is described on page 43.

The new method is based on the following assumptions:

1. That performing multiple lifting tasks would increase the physical or metabolic load, and that this increased load should be reflected in a reduced recommended weight limit and increased Lifting Index.

2. That an increase in the Lifting Index depends upon the characteristics of the additional lifting task.

3. That the increase in the Lifting Index due to the addition of one or more tasks is independent of the Lifting Index of any of the preceding tasks (i.e., Lifting Indices from tasks already performed).

Although the procedure does not consider the potential interaction between individual lifting tasks, we believe this effect is minimal.

The new method is based on the concept that the Composite Lifting Index (CLI), which represents the collective demands of the job, is equal to the sum of the largest Single Task Lifting Index (STLI) and the incremental increases in the CLI as each subsequent task is added. The incremental increase in the CLI for a specific task is defined as the difference between the Lifting Index for that task at the cumulative frequency and the Lifting Index for that task at its actual frequency. For example, consider two identical tasks (A and B), each with a lifting frequency of 1 lift/minute.

Using the new concept:

$$CLI = LI_{A,1} + (LI_{B,2} - LI_{B,1})$$

In these equations, the numeric part of the subscript represents the frequency, such that $LI_{B,2}$ indicates the LI value for Task B at a frequency of 2 lifts/minute and $LI_{B,1}$ indicates the LI value for Task B at a frequency of 1 lift/minute.

Since task A and B are identical, $LI_{A,1}$ and $LI_{B,1}$ cancel out and $CLI = LI_{B,2}$. As expected, the CLI for the job is equivalent to the LI value for the simple task being performed at a rate of 2 times/minute. Now, if the two tasks are different, then

$$CLI = LI_{A,1} + (LI_{B,2} - LI_{B,1})$$

In this case, $LI_{A,1}$ and $LI_{B,1}$ do not cancel each other out. The CLI is equal to the sum of $LI_{A,1}$, which refers to the demand of Task A, and the increment of demand for Task B, with the increment being equal to the increase in demand when the frequency for Task B is increased from 1 lift/minute (corresponding to the frequency of Task A) to a rate of 2 lifts/minute (corresponding to the sum of the frequencies of Task A and B). Thus, as each additional task is added, the **CLI** is increased appropriately.

While the new method has not been validated at the workplace, this multi-task version will minimize errors due to averaging; and thereby, provide a more accurate method for estimating the combined effects of multi-tasked lifting jobs than was provided in the NIOSH WPG (1981).

Many of the lifting jobs in the workplace have multiple lifting activities, and therefore could be analyzed as either a single or a multi-task lifting job. When detailed information is needed, however, to specify engineering modifications, then the multi-task approach should be used. On the other hand, the multi-task procedure is more complicated than the single-task procedure, and requires a greater understanding of assessment terminology and mathematical concepts. Therefore, the decision to use the single or multi-task approach should be based on: (1) the need for detailed information about all facets of the multi-task lifting job, (2) the need for accuracy and completeness of data in performing the analysis, and (3) the analyst's level of understanding of the assessment procedures.

To perform a lifting analysis using the revised lifting equation, two steps are undertaken: (1) data is collected at the worksite and (2) the Recommended Weight Limit and Lifting Index values are computed using the single-task or multi-task analysis procedure. These two steps are described in the following sections.

2.2. Collect Data (Step 1)

The relevant task variables must be carefully measured and clearly recorded in a concise format. The Job Analysis Worksheet for either a single-task analysis (Figure 3) or a multi-task analysis (Figure 4) provides a simple form for recording the task variables and the data needed to calculate the RWL and the LI values. A thorough job analysis is required to identify and catalog each independent lifting task that comprises the worker's complete job. For multi-task jobs, data must be collected for each individual task. The data needed for each task include the following:

1. **Weight of the object lifted.** Determine the load weight (L) of the object (if necessary, use a scale). If the weight of the load varies from lift to lift, record the average and maximum weights.

2. **Horizontal and vertical locations of the hands with respect to the mid-point between the ankles.** Measure the horizontal location (H) and vertical location (V) of the hands at both the origin and destination.

3. **Angle of asymmetry.** Determine the angle of asymmetry (A) at the origin and destination of the lift.

4. **Frequency of lift.** Determine the average lifting frequency rate (F), in lifts/min, periodically throughout the work session (average over at least a 15-minute period). If the lifting frequency varies from session to session by more than two lifts/min, each work session should be analyzed as a separate task. The duration category, however, must be based on the overall work pattern of the entire workshift.

5. **Lifting duration.** Determine the total time engaged in continuous lifting and the schedule of recovery allowances (i.e., light work assignments) for each lifting task. Compute the recovery-time to work-time ratio to classify the job for work duration (i.e., Short, Moderate, or Long).

JOB ANALYSIS WORKSHEET

DEPARTMENT _____ **JOB DESCRIPTION** _____

JOB TITLE _____

ANALYST'S NAME _____

DATE _____

STEP 1. Measure and record task variables

Object Weight (lbs)		Hand Location (in)				Vertical Distance (in)	Asymmetric Angle (degrees)		Frequency Rate	Duration	Object Coupling
		Origin		Dest.			Origin	Destination	lifts/min	(HRS)	
L (AVG.)	L (Max.)	H	V	H	V	D	A	A	F		C

STEP 2. Determine the multipliers and compute the RWL's

RWL = LC × HM × VM × DM × AM × FM × CM

ORIGIN **RWL** = [51] × [ ] × [ ] × [ ] × [ ] × [ ] × [ ] = [ ] **Lbs**

DESTINATION **RWL** = [51] × [ ] × [ ] × [ ] × [ ] × [ ] × [ ] = [ ] **Lbs**

STEP 3. Compute the LIFTING INDEX

ORIGIN LIFTING INDEX = $\frac{\text{OBJECT WEIGHT (L)}}{\text{RWL}}$ = _____ = [ ]

DESTINATION LIFTING INDEX = $\frac{\text{OBJECT WEIGHT (L)}}{\text{RWL}}$ = _____ = [ ]

Figure 3: Single Task Job Analysis Worksheet

MULTI-TASK JOB ANALYSIS WORKSHEET

DEPARTMENT _____ JOB DESCRIPTION

JOB TITLE _____ _____

ANALYST'S NAME _____ _____

DATE _____ _____

STEP 1. Measure and Record Task Variable Data

Task No.	Object Weight (lbs)		Hand Location (in)				Vertical Distance (in)	Asymmetry Angle (degs)		Frequency Rate lifts/min	Duration Hrs	Coupling
			Origin		Dest.			Origin	Dest.			
	L (Avg.)	L (Max.)	H	V	H	V	D	A	A	F		C
_____												
_____												
_____												
_____												
_____												

STEP 2. Compute multipliers and FIRWL, STRWL, FILI, and STLI for Each Task

Task No.	LC x HM x VM x DM x AM x CM						FIRWL x FM		STRWL	FILI = L/FIRWL	STLI = L/STRWL	New Task No.	F
	51												
	51												
	51												
	51												
	51												

STEP 3. Compute the Composite Lifting Index for the Job (After renumbering tasks)

$CLI = STLI_1 + \Delta FILI_2 + \Delta FILI_3 + \Delta FILI_4 + \Delta FILI_5$

	$FILI_2(1/FM_{1,2} - 1/FM_1)$	$FILI_3(1/FM_{1,2,3} - 1/FM_{1,2})$	$FILI_4(1/FM_{1,2,3,4} - 1/FM_{1,2,3})$	$FILI_5(1/FM_{1,2,3,4,5} - 1/FM_{1,2,3,4})$
CLI =				

Figure 4: MULTI-TASK JOB ANALYSIS WORKSHEET

6. **Coupling type**. Classify the hand-to-container coupling based on Table 6

2.3. Single-Task Assessment (Step 2)

Calculate the RWL at the origin for each lift. For lifting tasks that require significant control at the destination, calculate the RWL at **both** the origin and the destination of the lift. The latter procedure is required if (1) the worker has to re-grasp the load near the destination of the lift, (2) the worker has to momentarily hold the object at the destination, or (3) the worker has to position or guide the load at the destination. The purpose of calculating the RWL at both the origin and destination of the lift is to identify the most stressful location of the lift. Therefore, the lower of the RWL values at the origin or destination should be used to compute the Lifting Index for the task, since this value would represent the limiting set of conditions.

The assessment is completed on the single-task worksheet by determining the lifting index (LI) for the task of interest. This is accomplished by comparing the actual weight of the load (L) lifted with the RWL value obtained from the lifting equation.

2.4. Multi-Task Procedure

1. Compute the Frequency-Independent Recommended Weight Limit (FIRWL) and Single-Task Recommended Weight Limit (STRWL) for each task.

2. Compute the Frequency-Independent Lifting Index (FILI) and Single-Task Lifting Index (STLI) for each task.

3. Compute the Composite Lifting Index (CLI) for the overall job.

2.4.1. Compute the FIRWL for Each Task

Compute the Frequency Independent Weight Limit (FIRWL) value for each task by using the respective task variables and setting the Frequency Multiplier to a value of 1.0. The FIRWL for each task reflects the compressive force and muscle strength demands for a single repetition of that task. If significant control is required at the destination for any individual task, the FIRWL must be computed at both the origin and the destination of the lift, as described above for a single-task analysis.

2.4.2. Compute the STRWL for Each Task

Compute the Single-Task Recommended Weight Limit (STRWL) for each task by multiplying its FIRWL by its appropriate Frequency Multiplier (FM). The STRWL for a task reflects the overall demands of that task, assuming it was the only task being performed. Note, this value does not reflect the overall demands of the task when the other tasks are considered. Nevertheless, this value is helpful in determining the extent of excessive physical stress for an individual task.

2.4.3. Compute the FILI for Each Task

Compute the Frequency-Independent Lifting Index (FILI) for each task by dividing the ***maximum*** load weight (L) for that task by the respective FIRWL. The maximum weight is used to compute the FILI because the maximum weight determines the maximum biomechanical loads to which the body will be exposed, regardless of the frequency of occurrence.. Thus, the FILI can identify individual tasks with potential strength problems for infrequent lifts. If any of the FILI values exceed a value of 1.0, then ergonomic changes may be needed to decrease the strength demands.

2.4.4. Compute the STLI for Each Task

Compute the Single-Task Lifting Index (STLI) for each task by dividing the ***average*** load weight (L) for that task by the respective STRWL. The average weight is used to compute the STLI because the average weight provides a better representation of the metabolic demands, which are distributed across the tasks, rather than dependent on individual tasks. The STLI can be used to identify individual tasks with excessive physical demands (i.e., tasks that would result in fatigue). The STLI values do not indicate the relative stress of the individual tasks in the context of the whole job, but the STLI value can be used to prioritize the individual tasks according to the magnitude of their physical stress. Thus, if any of the STLI values exceed a value of 1.0, then ergonomic changes may be needed to decrease the overall physical demands of the task. Note, it may be possible to have a job in which all of the individual tasks have a STLI less than 1.0 and still be physically demanding due to the combined demands of the tasks. In cases where the FILI exceeds the STLI for any task, the maximum weights may represent a significant problem and careful evaluation is necessary.

2.4.5. Compute the CLI for the Job

The assessment is completed on the multi-task worksheet by determining the Composite Lifting Index (CLI) for the overall job. The CLI is computed as follows:

1. The tasks are renumbered in order of decreasing physical stress, beginning with the task with the greatest STLI down to the task with the smallest STLI. The tasks are renumbered in this way so that the more difficult tasks are considered first.

2. The **CLI** for the job is then computed according to the following formula:

$$CLI = STLI_1 + \sum \Delta LI$$

Where:

$$\sum \Delta LI = (FILI_2 \times (\frac{1}{FM_{1,2}} - \frac{1}{FM_1}))$$

$$+(FILI_3 \times (\frac{1}{FM_{1,2,3}} - \frac{1}{FM_{1,2}}))$$

$$+ (FILI_4 \times (\frac{1}{FM_{1,2,3,4}} - \frac{1}{FM_{1,2,3}}))$$

$$\vdots$$

$$+(FILI_n \times (\frac{1}{FM_{1,2,3,4,\ldots,n}} - \frac{1}{FM_{1,2,3,\ldots,(n-1)}}))$$

Note, that (1) the numbers in the subscripts refer to the new task numbers; and, (2) the FM values are determined from Table 5, based on the sum of the frequencies for the tasks listed in the subscripts.

The following example is provided to demonstrate this step of the multi-task procedure. Assume that an analysis of a typical three-task job provided the following results:

Task Number	1	2	3
Load Weight (L)	30	20	10
Task Frequency (F)	1	2	4
FIRWL	20	20	15
FM	.94	.91	.84
STRWL	18.8	18.2	12.6
FILI	1.5	1.0	.67
STLI	1.6	1.1	.8
New Task Number	1	2	3

To compute the Composite Lifting Index (CLI) for this job, the tasks are renumbered in order of decreasing physical stress, beginning with the task with the greatest STLI down to the task with the smallest STLI. In this case, the task numbers do not change. Next, the CLI is computed according to the formula shown on the previous page. The task with the greatest CLI is Task 1 (STLI = 1.6). The sum of the frequencies for Tasks 1 and 2 is 1+2 or 3, and the sum of the frequencies for Tasks 1, 2 and 3 is 1+2+4 or 7. Then, from Table 5, FM_1 is .94, $FM_{1,2}$ is .88, and $FM_{1,2,3}$ is .70. Finally, the CLI = 1.6 + 1.0(1/.88 - 1/.94)+.67(1/.70 - 1/.88) = 1.6 + .07 + .20 = 1.9. Note that the FM values were based on the sum of the frequencies for the subscripts, the vertical height, and the duration of lifting.

3. EXAMPLE PROBLEMS

3.1. How to Use the Example Problems

There are several approaches for controlling the stressors related to manual lifting. One approach is to eliminate the manual requirements of the job by using hoists, cranes, manipulators, chutes, conveyors, or lift trucks, or through mechanization or automation. If the manual requirements of the job cannot be eliminated, then the demands of the job should be reduced through ergonomic design/redesign (e.g., modify the physical layout of the job or reduce the frequency or duration of lifting). As a last resort, and if redesign is not feasible, the stress on the worker should be reduced by distributing the stress between two or more workers (e.g., team lifting).

In many cases elimination of manual lifting is not feasible or practical. Thus, ergonomic design/redesign is the best available control strategy. The goal of such a strategy is to reduce the demands of the job by reducing exposure to dangerous loading conditions and stressful body movements.

Ergonomic design/redesign includes: (1) physical changes in the layout of the job, (2) reductions in the lifting frequency rate and/or the duration of the work period, and (3) modifications of the physical properties of the object lifted, such as type, size, or weight and/or improvement of hand-to-object coupling.

The lifting equation and procedures presented in this document were designed to identify ergonomic problems, and evaluate ergonomic design/redesign solutions. By examining the value of each task multiplier, the penalties associated with each job-related risk factor can be evaluated, thereby determining their relative importance in consideration of alternate workplace designs. The task factors that cause the greatest reduction in the load constant should be considered as the first priority for job redesign.

Ten examples are provided to demonstrate the proper application of the lifting equation and procedures. The procedures provide a method for determining the level of physical stress associated with a specific set of lifting conditions, and assist in identifying the contribution of each job-related factor. The examples also provide guidance in developing an ergonomic redesign strategy. Specifically, for each example, a job description, job analysis, hazard assessment, redesign suggestion, illustration, and completed worksheet are provided. The ten examples were chosen to provide a representative sample of lifting jobs for which the application of this equation was suitable.

Note, you might obtain slightly different values from those displayed in the worksheet examples due to differences in rounding, especially when these values are compared to those determined from computerized versions of the equation. These differences should not be significant. Also, for these examples, multipliers are rounded to two places to the right of the decimal and weight limit (RWL, FIRWL, and STRWL) and lifting index values (LI, FILI, STLI, and CLI) are rounded to one place to the right of the decimal.

The examples are organized as follows:

A. Single Task, Performed a Few Times Per Shift
   Loading Punch Press Stock, Example 1
   Loading Supply Rolls, Example 2
   Loading Bags Into A Hopper, Example 3

B. Single Task, Performed Repetitively
   Package Inspection, Example 4
   Dish-Washing Machine Unloading, Example 5
   Product Packaging I, Example 6

C. Multi-Task, Short Duration (1 hr or less)
   Depalletizing Operation, Example 7
   Handling Cans of Liquid, Example 8

D. Multi-Task, Long Duration (more than 2 hours but less than 8)
Product Packaging II, Example 9
Warehouse Order Filling, Example 10

To help clarify the discussion of the 10 example problems, and to provide a useful reference for determining the multiplier values, each of the six multipliers used in the equation have been reprinted in tabular form in Tables 1 through 5 and Table 7 on the following page.

Table 1
Horizontal Multiplier

H	HM	H	HM
	in	cm	
≤10	1.00	≤25	1.00
11	.91	28	.89
12	.83	30	.83
13	.77	32	.78
14	.71	34	.74
15	.67	36	.69
16	.63	38	.66
17	.59	40	.63
18	.56	42	.60
19	.53	44	.57
20	.50	46	.54
21	.48	48	.52
22	.46	50	.50
23	.44	52	.48
24	.42	54	.46
25	.40	56	.45
>25	.00	58	.43
		60	.42
		63	.40
		>63	.00

Table 2
Vertical Multiplier

V	VM	V	VM
in		cm	
0	.78	0	.78
5	.81	10	.81
10	.85	20	.84
15	.89	30	.87
20	.93	40	.90
25	.96	50	.93
30	1.00	60	.96
35	.96	70	.99
40	.93	80	.99
45	.89	90	.96
50	.85	100	.93
55	.81	110	.90
60	.78	120	.87
65	.74	130	.84
70	.70	140	.81
>70	.00	150	.78
		160	.75
		170	.72
		175	.70
		>175	.00

Table 5
Frequency Multiplier

F lifts/ min	DURATION					
	< 1 hour		1-2 hours		2-8 hours	
	V< 30 in	V≥ 30 in	V< 30 in	V≥ 30 in	V< 30 in	V≥ 30 in
≤2	1.00	1.00	.95	.95	.85	.85
.5	.97	.97	.92	.92	.81	.81
1	.94	.94	.88	.88	.75	.75
2	.91	.91	.84	.84	.65	.65
3	.88	.88	.79	.79	.55	.55
4	.84	.84	.72	.72	.45	.45
5	.80	.80	.60	.60	.35	.35
6	.75	.75	.50	.50	.27	.27
7	.70	.70	.42	.42	.22	.22
8	.60	.60	.35	.35	.18	.18
9	.52	.52	.30	.30	.00	.15
10	.45	.45	.26	.26	.00	.13
11	.41	.41	.00	.23	.00	.00
12	.37	.37	.00	.21	.00	.00
13	.00	.34	.00	.00	.00	.00
14	.00	.31	.00	.00	.00	.00
15	.00	.28	.00	.00	.00	.00
>15	.00	.00	.00	.00	.00	.00

Table 3
Distance Multiplier

D	DM	D	DM
in		cm	
≤10	1.00	≤25	1.00
15	.94	40	.93
20	.91	55	.90
25	.89	70	.88
30	.88	85	.87
35	.87	100	.87
40	.87	115	.86
45	.86	130	.86
50	.86	145	.85
55	.85	160	.85
60	.85	175	.85
70	.85	>175	.00
>70	.00		

Table 4
Asymmetric Multiplier

A	AM
deg	
0	1.00
15	.95
30	.90
45	.86
60	.81
75	.76
90	.71
105	.66
120	.62
135	.57
>135	.00

Table 7
Coupling Multiplier

COUPLING TYPE	CM	
	V < 30 in	V≥ 30 in
GOOD	1.00	1.00
FAIR	.95	1.00
POOR	.90	.90

A series of general design/redesign suggestions for each job-related risk factor are provided in Table 8. These suggestions can be used to develop a practical ergonomic design/redesign strategy.

Table 8
General Design/Redesign Suggestions

If HM is less than 1.0	Bring the load closer to the worker by removing any horizontal barriers or reducing the size of the object. Lifts near the floor should be avoided; if unavoidable, the object should fit easily between the legs.
If VM is less than 1.0	Raise/lower the origin/destination of the lift. Avoid lifting near the floor or above the shoulders.
If DM is less than 1.0	Reduce the vertical distance between the origin and the destination of the lift.
If AM is less than 1.0	Move the origin and destination of the lift closer together to reduce the angle of twist, or move the origin and destination further apart to force the worker to turn the feet and step, rather than twist the body.
If FM is less than 1.0	Reduce the lifting frequency rate, reduce the lifting duration, or provide longer recovery periods (i.e., light work period).
If CM is less than 1.0	Improve the hand-to-object coupling by providing optimal containers with handles or handhold cutouts, or improve the handholds for irregular objects.
If the RWL at the destination is less than at the origin	Eliminate the need for significant control of the object at the destination by redesigning the job or modifying the container/object characteristics. (See requirements for significant control, p. 36, 43.)

3.2. Jobs Performed a Few Times Per Shift

3.2.1. Loading Punch Press Stock, Example 1

3.2.1.1. Job Description

Figure 5 illustrates a common oversight in physically stressful jobs. A punch press operator routinely handles small parts, feeding them into a press and removing them. A cursory view of this task may overlook the fact that once per shift the operator must load a heavy reel of supply stock (illustrated at floor height) from the floor onto the machine. The diameter of the reel is 30 inches, the width of the reel between the worker's hands is 12 inches, and the reel weighs 44 lbs. Significant control of the load is required at the destination of the lift due to the design of the machine. Also, the worker cannot get closer to the roll (i.e., between the legs) because the roll is too awkward.

3.2.1.2. Job Analysis

The task variable data are measured and recorded on the job analysis worksheet (Figure 6). Assuming the operator lifts the reel in the plane shown, rather than on the side of the machine, the vertical height (V) at the origin is 15 inches, the vertical height (V) at the destination is 63 inches, and the horizontal distance (H) is 23 inches at both the origin and the destination of the lift. The activity occurs only once per shift, so F is assumed to be < 0.2 (see Table 5), and duration is assumed to be less than 1 hour.

No asymmetric lifting is involved (i.e, $A = 0$), and according to Table 6, the couplings are classified as fair because the object is irregular and the fingers can be flexed about 90 degrees. Since significant control is required at the destination, the RWL must be computed at both the origin and the destination of the lift.

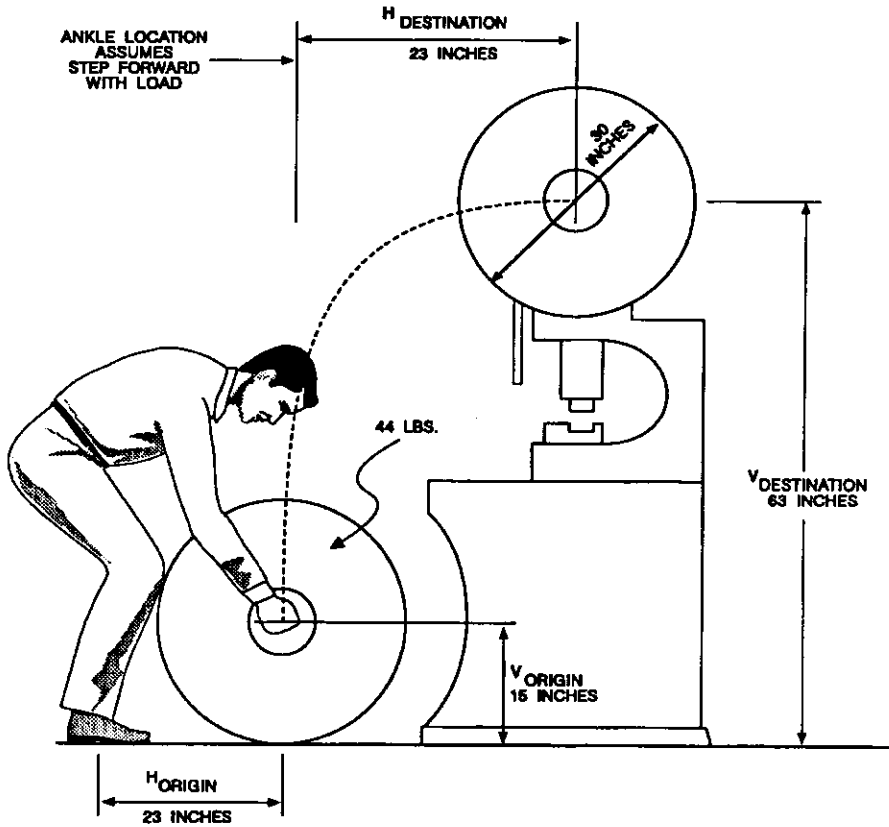

Figure 5 Loading Punch Press Stock, Example 1

The multipliers are determined from the lifting equation or from tables (Tables 1 to 5, and Table 7). The CM is .95 at the origin and 1.0 at the destination, due to the difference in the vertical height at the origin and destination. As shown in Figure 6, the RWL for this activity is 16.3 lbs at the origin and 14.5 lbs at the destination.

3.2.1.3. Hazard Assessment

The weight to be lifted (44 lbs) is greater than the RWL at both the origin and the destination of the lift (16.3 lbs and 14.5 lbs, respectively). The LI at the origin is 44/16.3 or 2.7, and the LI at the destination is 44/14.5 or 3.0. These values indicate that this lift would be hazardous for a majority of healthy industrial workers.

3.2.1.4. Redesign Suggestions

The worksheet shown in Figure 6 indicates that the smallest multipliers (i.e., the greatest penalties) are .44 for the HM, .75 for the VM at the destination, and .86 for the DM. Using Table 8, the following job modifications are suggested:

1. Bring the object closer to the worker at the destination to increase the HM value.

2. Lower the destination of the lift to increase the VM value.

3. Reduce the vertical travel distance between the origin and the destination of the lift to increase the DM value.

4. Modify the job so that significant control of the object at the destination is not required. This will eliminate the need to use the lower RWL value at the destination.

If the operator could load the machine from the side, rather than the from the front, the reel could be turned 90° which would reduce the horizontal location of the hands at the origin

JOB ANALYSIS WORKSHEET

DEPARTMENT Manufacturing
JOB TITLE Punch Press Operator
ANALYST'S NAME
DATE

JOB DESCRIPTION Loading supply stock onto punch press machine Example 1

STEP 1. Measure and record task variables

Object Weight (lbs)		Hand Location (in)				Vertical Distance (in)	Asymmetric Angle (degrees)		Frequency Rate	Duration	Object Coupling
		Origin		Dest.			Origin	Destination	lifts/min	(HRS)	
L (AVG.)	L (Max.)	H	V	H	V	D	A	A	F		C
44	44	23	15	23	63	48	0	0	<.2	<1	Fair

STEP 2. Determine the multipliers and compute the RWL's

RWL = LC x HM x VM x DM x AM x FM x CM

ORIGIN RWL = 51 x .44 x .89 x .86 x 1.0 x 1.0 x .95 = 16.3 Lbs

DESTINATION RWL = 51 x .44 x .75 x .86 x 1.0 x 1.0 x 1.0 = 14.5 Lbs

STEP 3. Compute the LIFTING INDEX

ORIGIN LIFTING INDEX = $\frac{\text{OBJECT WEIGHT (L)}}{\text{RWL}} = \frac{44}{16.3} = 2.7$

DESTINATION LIFTING INDEX = $\frac{\text{OBJECT WEIGHT (L)}}{\text{RWL}} = \frac{44}{14.5} = 3.0$

Figure 6: Example 1, Job Analysis Worksheet

(i.e., H = 10 inches) and destination of the lift (i.e., H = 12 inches). The grip, however, would be poor because the object is bulky and hard to handle and the fingers could not be flexed near 90^0 when picking up the reel (see Table 6, Note 4).

The RWL and corresponding LI values for this preferred combination of task variables (i.e., loading the machine from the side) are shown on the modified job analysis sheet (Figure 7). At the origin, the RWL is 35.1 lbs and the LI is 1.3. At the destination, the RWL is 24.6 lbs and the LI is 1.8. Since the LI is still greater than 1.0, however, a more comprehensive solution may be needed. This could include: (1) lowering the vertical height of the destination, which would increase the VM and the DM at both the origin and the destination of the lift; (2) reducing the size and/or weight of the supply reel; or, (3) transferring the supply reel from the storage area on a mobile, mechanical lifting device or jack that could be moved near the machine to eliminate the need for manual lifting. If it is not feasible to eliminate or redesign the job, then other measures, such as assigning two or more workers, could be considered as an interim control procedure.

3.2.1.5. Comments

Although ergonomic redesign is preferred, this example demonstrates how a change in work practices (i.e., insuring that the operator can load the reel from the side) can reduce the magnitude of physical stress associated with a manual lifting task. This approach, however, relies more on worker compliance than on physical job modifications.

JOB ANALYSIS WORKSHEET

DEPARTMENT Manufacturing
JOB TITLE Punch Press Operator
ANALYST'S NAME
DATE

JOB DESCRIPTION Loading supply stock onto punch press machine Modified Example 1

STEP 1. Measure and record task variables

Object Weight (lbs)		Hand Location (in)				Vertical Distance (in)	Asymmetric Angle (degrees)		Frequency Rate	Duration	Object Coupling
		Origin		Dest.			Origin	Destination	lifts/min	(HRS)	
L (AVG.)	L (Max.)	H	V	H	V	D	A	A	F		C
44	44	10	15	12	63	48	0	0	<.2	<1	Poor

STEP 2. Determine the multipliers and compute the RWL's

RWL = LC × HM × VM × DM × AM × FM × CM

ORIGIN RWL = 51 × 1.0 × .89 × .86 × 1.0 × 1.0 × .90 = 35.1 **Lbs**

DESTINATION RWL = 51 × .83 × .75 × .86 × 1.0 × 1.0 × .90 = 24.6 **Lbs**

STEP 3. Compute the LIFTING INDEX

ORIGIN LIFTING INDEX = OBJECT WEIGHT (L) / RWL = 44 / 35.1 = 1.3

DESTINATION LIFTING INDEX = OBJECT WEIGHT (L) / RWL = 44 / 24.6 = 1.8

Figure 7: Modified Example 1, Job Analysis Worksheet

3.2.2. Loading Supply Rolls, Example 2

3.2.2.1. Job Description

With both hands directly in front of the body, a worker lifts the core of a 35-lb roll of paper from a cart, and then shifts the roll in the hands and holds it by the sides to position it on a machine, as shown in Figure 8. Significant control of the roll is required at the destination of the lift. Also, the worker must crouch at the destination of the lift to support the roll in front of the body, but does not have to twist.

3.2.2.2. Job Analysis

The task variable data are measured and recorded on the job analysis worksheet (Figure 9). The vertical location of the hands is 27 inches at the origin and 10 inches at the destination. The horizontal location of the hands is 15 inches at the origin and 20 inches at the destination. The asymmetric angle is 0 degrees at both the origin and the destination, and the frequency is 4 lifts/shift (i.e., less than .2 lifts/min for less than 1 hour - see Table 5).

Using Table 6, the coupling is classified as poor because the worker must reposition the hands at the destination of the lift and they can not flex the fingers to the desired 90^0 angle (e.g., hook grip). No asymmetric lifting is involved (i.e., A = 0), and significant control of the object is required at the destination of the lift. Thus, the RWL should be computed at both the origin and the destination of the lift. The multipliers are computed from the lifting equation or determined from the multiplier tables (Tables 1 to 5, and Table 7). As shown in Figure 9, the RWL for this activity is 28.0 lbs at the origin and 18.1 lbs at the destination.

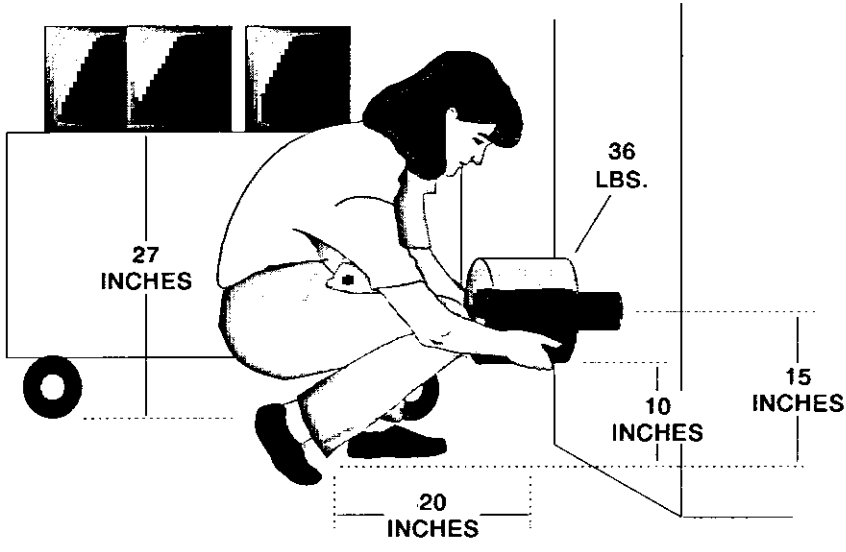

Figure 8 Loading Supply Rolls, Example 2

JOB ANALYSIS WORKSHEET

DEPARTMENT Shipping
JOB TITLE Packager
ANALYST'S NAME
DATE

JOB DESCRIPTION Loading paper supply rolls

Example 2

STEP 1. Measure and record task variables

Object Weight (lbs)		Hand Location (in)				Vertical Distance (in)	Asymmetric Angle (degrees)		Frequency Rate lifts/min	Duration (HRS)	Object Coupling
		Origin		Dest.			Origin	Destination			
L (AVG.)	L (Max.)	H	V	H	V	D	A	A	F		C
35	35	15	27	20	10	17	0	0	<.2	<1	Poor

STEP 2. Determine the multipliers and compute the RWL's

RWL = LC x HM x VM x DM x AM x FM x CM

ORIGIN RWL = 51 x .67 x .98 x .93 x 1.0 x 1.0 x .90 = 28.0 **Lbs**

DESTINATION RWL = 51 x .50 x .85 x .93 x 1.0 x 1.0 x .90 = 18.1 **Lbs**

STEP 3. Compute the LIFTING INDEX

ORIGIN LIFTING INDEX = $\frac{\text{OBJECT WEIGHT (L)}}{\text{RWL}} = \frac{35}{28.0} = 1.3$

DESTINATION LIFTING INDEX = $\frac{\text{OBJECT WEIGHT (L)}}{\text{RWL}} = \frac{35}{18.1} = 1.9$

Figure 9: Example 2, Job Analysis Worksheet

3.2.2.3. Hazard Assessment

The weight to be lifted (35 lb) is greater than the RWL at both the origin and destination of the lift (28.0 lb and 18.1 lb, respectively). The LI at the origin is 35 lbs/28.0 lbs or 1.3, and the LI at the destination is 35 lbs/18.1 lbs or 1.9. These values indicate that this job is only slightly stressful at the origin, but moderately stressful at the destination of the lift.

3.2.2.4. Redesign Suggestions

The first choice for reducing the risk of injury for workers performing this task would be to adapt the cart so that the paper rolls could be easily pushed into position on the machine, without manually lifting them.

If the cart cannot be modified, then the results of the equation may be used to suggest task modifications. The worksheet displayed in Figure 9 indicates that the multipliers with the smallest magnitude (i.e., those providing the greatest penalties) are .50 for the HM at the destination, .67 for the HM at the origin, .85 for the VM at the destination, and .90 for the CM value. Using Table 8, the following job modifications are suggested:

1. Bring the load closer to the worker by making the roll smaller so that the roll can be lifted from between the worker's legs. This will decrease the H value, which in turn will increase the HM value.

2. Raise the height of the destination to increase the VM.

3. Improve the coupling to increase the CM.

If the size of the roll can not be reduced, then the vertical height (V) of the destination should be increased. Figure 10 shows that if V was increased to about 30 inches, then VM would be increased from .85 to 1.0; the H value would be decreased from 20 inches to 15 inches, which would increase HM from .50 to .67.; the DM

would be increased from .93 to 1.0. Thus, the final RWL would be increased from 18.1 lbs to 30.8 lbs, and the LI at the destination would decrease from 1.9 to 1.1.

In some cases, redesign may not be feasible. In these cases, use of a mechanical lift may be more suitable. As an interim control strategy, two or more workers may be assigned to lift the supply roll.

3.2.2.5. Comments

The horizontal distance (H) is a significant factor that may be difficult to reduce because the size of the paper rolls may be fixed. Moreover, redesign of the machine may not be practical. Therefore, elimination of the manual lifting component of the job may be more appropriate than job redesign.

JOB ANALYSIS WORKSHEET

DEPARTMENT Shipping
JOB TITLE Packager
ANALYST'S NAME
DATE

JOB DESCRIPTION
Loading paper supply rolls

Modified Example 2

STEP 1. Measure and record task variables

Object Weight (lbs)		Hand Location (in)				Vertical Distance (in)	Asymmetric Angle (degrees)		Frequency Rate	Duration	Object Coupling
		Origin		Dest.			Origin	Destination	lifts/min	(HRS)	
L (AVG.)	L (Max.)	H	V	H	V	D	A	A	F		C
35	35	15	27	15	30	3	0	0	<.2	<1	Poor

STEP 2. Determine the multipliers and compute the RWL's

RWL = LC x HM x VM x DM x AM x FM x CM

ORIGIN RWL = 51 x .67 x .98 x 1.0 x 1.0 x 1.0 x .90 = 30.1 Lbs

DESTINATION RWL = 51 x .67 x 1.0 x 1.0 x 1.0 x 1.0 x .90 = 30.8 Lbs

STEP 3. Compute the LIFTING INDEX

ORIGIN LIFTING INDEX = $\frac{\text{OBJECT WEIGHT (L)}}{\text{RWL}} = \frac{35}{30.1} = 1.2$

DESTINATION LIFTING INDEX = $\frac{\text{OBJECT WEIGHT (L)}}{\text{RWL}} = \frac{35}{30.8} = 1.1$

Figure 10: Example 2, Modified Job Analysis Worksheet

3.2.3. Loading Bags Into A Hopper, Example 3

3.2.3.1. Job Description

The worker positions himself midway between the handtruck and the mixing hopper, as illustrated in Figure 11. Without moving his feet, he twists to the right and picks up a bag off the handtruck. In one continuous motion he then twists to his left to place the bag on the rim of the hopper. A sharp edged blade within the hopper cuts open the bag to allow the contents to fall into the hopper. This task is done infrequently (i.e., 1-12 times per shift) with large recovery periods between lifts (i.e., > 1.2 Recovery Time/Work Time ratio). In observing the worker perform the job, it was determined that the non-lifting activities could be disregarded because they require minimal force and energy expenditure.

Significant control is not required at the destination, but the worker twists at the origin and destination of the lift. Although several bags are stacked on the hand truck, the highest risk of overexertion injury is associated with the bag on the bottom of the stack; therefore, only the lifting of the bottom bag will be examined. Note, however, that the frequency multiplier is based on the overall frequency of lifting for all of the bags.

3.2.3.2. Job Analysis

The task variable data are measured and recorded on the job analysis worksheet (Figure 12). The vertical location of the hands is 15 inches at the origin and 36 inches at the destination. The horizontal location of the hands is 18 inches at the origin and 10 inches at the destination. The asymmetric angle is 45^0 at the origin and 45^0 at the destination of the lift, and the frequency is less than .2 lifts/min for less than 1 hour (see Table 5).

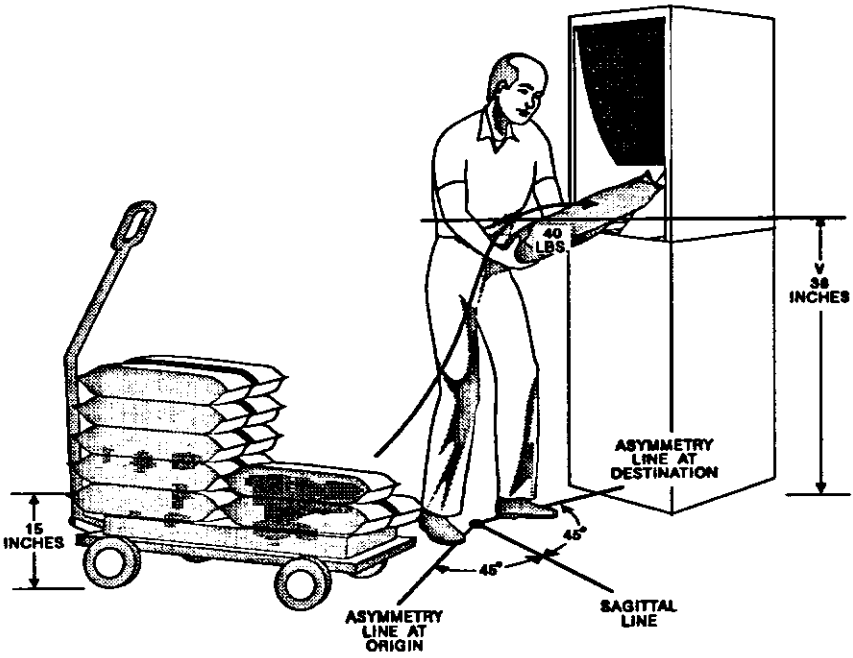

Figure 11 Loading Bags Into Hopper, Example 3

Using Table 6, the coupling is classified as fair because the worker can flex the fingers about 90^0 and the bags are semi-rigid (i.e., they do not sag in the middle). Significant control of the object is not required at the destination of the lift so the RWL is computed only at the origin. The multipliers are computed from the lifting equation or determined from the multiplier tables (Tables 1 to 5, and Table 7). As shown in Figure 12, the RWL for this activity is 18.9 lbs.

3.2.3.3. Hazard Assessment

The weight to be lifted (40 lbs) is greater than the RWL (18.9 lbs). Therefore, the LI is 40/18.9 or 2.1. This job would be physically stressful for many industrial workers.

3.2.3.4. Redesign Suggestions

The worksheet shows that the smallest multipliers (i.e., the greatest penalties) are .56 for the HM, .86 for the AM, and .89 for the VM. Using Table 8, the following job modifications are suggested:

1. Bringing the load closer to the worker to increase the HM.

2. Reducing the angle of asymmetry to increase AM. This could be accomplished either by moving the origin and destination points closer together or further apart.

3. Raising the height at the origin to increase the VM.

If the worker could get closer to the bag before lifting, the H value could be decreased to 10 inches, which would increase the HM to 1.0, the RWL would be increased to 33.7 lbs, and the LI would be decreased to 1.2 (i.e., 40/33.7).

JOB ANALYSIS WORKSHEET

DEPARTMENT Manufacturing
JOB TITLE Batch Processor
ANALYST'S NAME
DATE

JOB DESCRIPTION Dumping bags into mixing hopper
Example 3

STEP 1. Measure and record task variables

Object Weight (lbs)		Hand Location (in)				Vertical Distance (in)	Asymmetric Angle (degrees)		Frequency Rate	Duration	Object Coupling
		Origin		Dest.			Origin	Destination	lifts/min	(HRS)	
L (AVG.)	L (Max.)	H	V	H	V	D	A	A	F		C
40	40	18	15	10	36	21	45	45	<.2	<1	Fair

STEP 2. Determine the multipliers and compute the RWL's

RWL = LC x HM x VM x DM x AM x FM x CM

ORIGIN RWL = 51 x .56 x .89 x .91 x .86 x 1.0 x .95 = 18.9 Lbs

DESTINATION RWL = 51 x ___ x ___ x ___ x ___ x ___ x ___ = ___ Lbs

STEP 3. Compute the LIFTING INDEX

ORIGIN LIFTING INDEX = OBJECT WEIGHT (L) / RWL = 40 / 18.9 = 2.1

DESTINATION LIFTING INDEX = OBJECT WEIGHT (L) / RWL = ___ = ___

Figure 12: Example 3, Job Analysis Worksheet

3.2.3.5. Comments

This example demonstrates that certain lifting jobs may be evaluated as a single-task or multi-task job. In this case, only the most stressful component of the job was evaluated. For repetitive lifting jobs, the multi-task approach may be more appropriate. (See Examples 7-10).

3.3. Single Task, Performed Repetitively

3.3.1. Package Inspection, Example 4

3.3.1.1. Job Description

The job illustrated in Figure 13 consists of a worker inspecting compact containers for damage on a low shelf, and then lifting them with both hands directly in front of the body from shelf 1 to shelf 2 at a rate of 3/min for a duration of 45 minutes. For this analysis, assume that (1) the worker cannot take a step forward when placing the object at the destination, due to the bottom shelf, and (2) significant control of the object is required at the destination. The containers are of optimal design, but without handles (For classification, refer to Table 6).

3.3.1.2. Job Analysis

The task variable data are measured and recorded on the task analysis worksheet (Figure 14). The horizontal distance at the origin of the lift is 10 inches and the horizontal distance at the destination of the lift is 20 inches. The height of shelf one is 22 inches and the height of shelf two is 59 inches. Since the container is of optimal design, but does not have handles or handhold cutouts, the coupling is defined as "fair" (see Table 6). No asymmetric lifting is involved (i.e., A = 0). Significant control of the load is required at the destination of the lift. Therefore, the RWL is computed at both the origin and the destination of the lift.

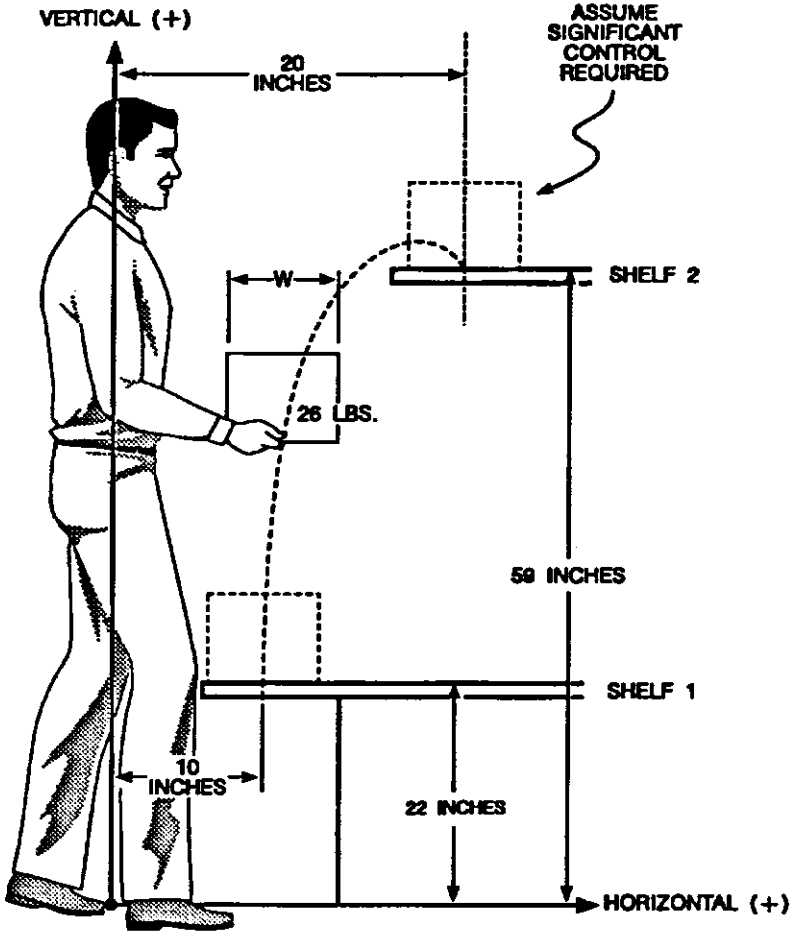

Figure 13 Package Inspection, Example 4

JOB ANALYSIS WORKSHEET

DEPARTMENT Quality Control
JOB TITLE Packing Inspector
ANALYST'S NAME
DATE

JOB DESCRIPTION Inspect packages

Example 4

STEP 1. Measure and record task variables

Object Weight (lbs)		Hand Location (in)				Vertical Distance (in)	Asymmetric Angle (degrees)		Frequency Rate	Duration	Object Coupling
		Origin		Dest.			Origin	Destination	lifts/min	(HRS)	
L (AVG.)	L (Max.)	H	V	H	V	D	A	A	F		C
26	26	10	22	20	59	37	0	0	3	.75	Fair

STEP 2. Determine the multipliers and compute the RWL's

RWL = LC × HM × VM × DM × AM × FM × CM

ORIGIN RWL = 51 × 1.0 × .94 × .87 × 1.0 × .88 × .95 = 34.9 **Lbs**

DESTINATION RWL = 51 × .50 × .78 × .87 × 1.0 × .88 × 1.0 = 15.2 **Lbs**

STEP 3. Compute the LIFTING INDEX

ORIGIN LIFTING INDEX = $\frac{\text{OBJECT WEIGHT (L)}}{\text{RWL}} = \frac{26}{34.9} = .8$

DESTINATION LIFTING INDEX = $\frac{\text{OBJECT WEIGHT (L)}}{\text{RWL}} = \frac{26}{15.2} = 1.7$

Figure 14: Example 4, Job Analysis Worksheet

The multipliers are computed from the lifting equation or determined from the multiplier tables (Tables 1 to 5, and Table 7). As shown in Figure 14, the RWL for this activity is 34.9 lbs at the origin and 15.2 lbs at the destination.

3.3.1.3. Hazard Assessment

The weight to be lifted (26 lbs) is less than the RWL at the origin (34.9 lbs) but greater than the RWL at the destination (15.2 lbs). The LI is 26/34.9 or .76 (rounded to .8) at the origin, and the LI is 26/15.2 or 1.7 at the destination. These values indicate that the destination of the lift is more stressful than the origin, and that some healthy workers would find this task physically stressful.

3.3.1.4. Redesign Suggestions

The worksheet illustrated in Figure 14 shows that the multipliers with the smallest magnitude (i.e., those that provide the greatest penalties) are .50 for the HM at the destination, .78 for the VM, .87 for the DM, and .88 for the FM at the destination of the lift. Using Table 8, the following job modifications are suggested:

1. Bring the destination point closer to the worker to increase the HM value.

2. Lower the height of shelf 2 to increase the VM value.

3. Decrease the vertical distance between origin and destination of lift to increase the DM value.

4. Reduce the lifting frequency rate to increase the FM value.

5. Modify the task so that there in no need for significant control of the object at the destination to eliminate the lower RWL value.

Practical job modifications could include bringing shelf 2 closer to the worker to reduce H, raising the height of shelf 1 to increase the

CM value, lowering the height of shelf 2 to reduce D, or reducing the need for significant control at the end of the lift by providing a receiving chute.

3.3.1.5. Comments

Since the lifting pattern is continuous over the 45 minute work session, the lifting frequency is not adjusted using the special procedure described on page 27.

3.3.2. Dish-Washing Machine Unloading, Example 5

3.3.2.1. Job Description

A worker manually lifts trays of clean dishes from a conveyor at the end of a dish washing machine and loads them on a cart as shown in Figure 15. The trays are filled with assorted dishes (e.g., glasses, plates, bowls) and silverware. The job takes between 45 minutes and 1 hour to complete, and the lifting frequency rate averages 5 lifts/min. Workers usually twist to one side of their body to lift the trays (i.e., asymmetric lift) and then rotate to the other side of their body to lower the trays to the cart in one smooth continuous motion. The maximum amount of asymmetric twist varies between workers and within workers, however, there is usually equal twist to either side. During the lift the worker may take a step toward the cart. The trays have well designed handhold cutouts and are made of lightweight materials.

3.3.2.2. Job Analysis

The task variable data are measured and recorded on the job analysis worksheet (Figure 16). At the origin of the lift, the horizontal distance (H) is 20 inches, the vertical distance (V) is 44 inches, and the angle of asymmetry (A) is 30^0. At the destination of the lift, H is 20 inches, V is 7 inches, and A is 30^0. The trays normally weigh from 5 lbs to 20 lbs, but for this example, assume that all of the trays weigh 20 lbs.

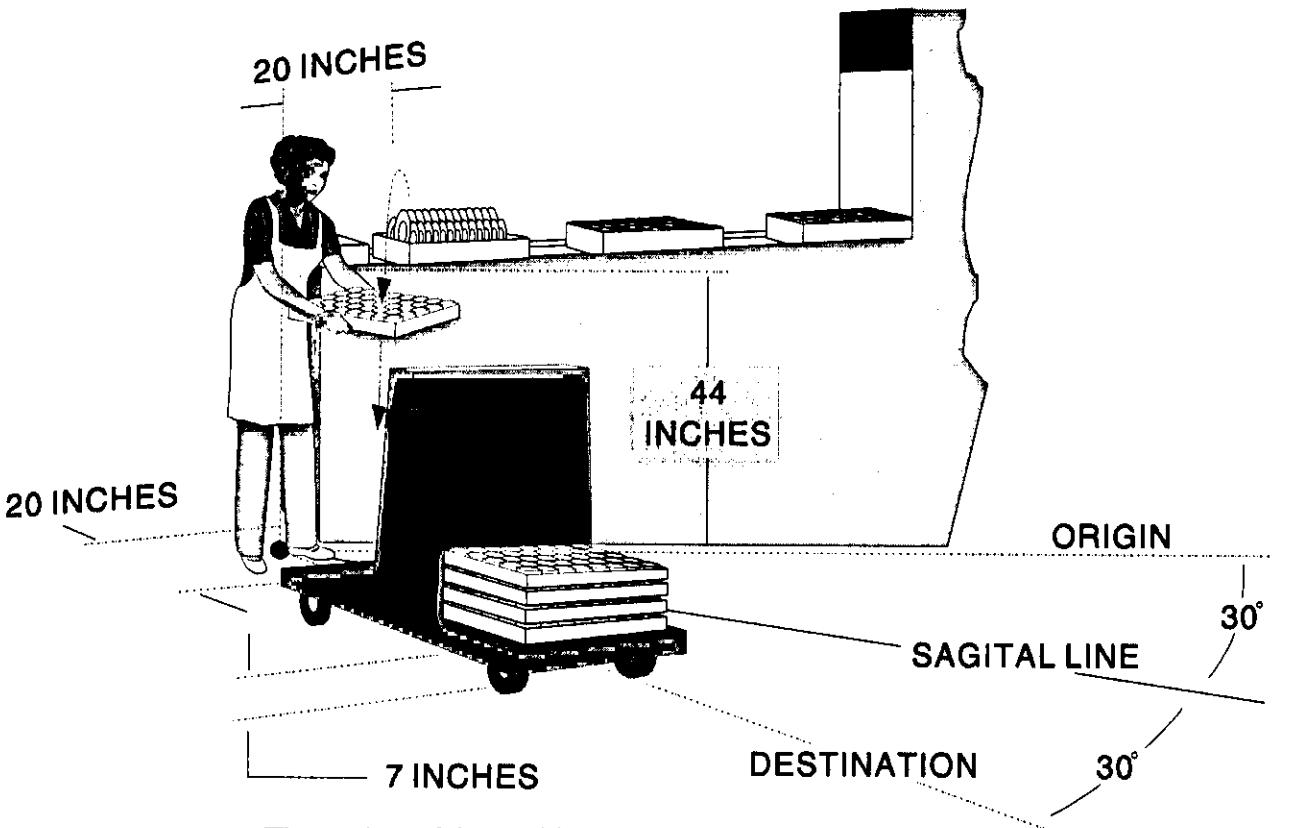

Figure 15 Dish-Washing Machine Unloading, Example 5

JOB ANALYSIS WORKSHEET

DEPARTMENT Food Service
JOB TITLE Cafeteria Worker
ANALYST'S NAME
DATE

JOB DESCRIPTION Unloading a dish-washing machine Example 5

STEP 1. Measure and record task variables

Object Weight (lbs)		Hand Location (in)				Vertical Distance (in)	Asymmetric Angle (degrees)		Frequency Rate	Duration	Object Coupling
		Origin		Dest.			Origin	Destination	lifts/min	(HRS)	
L (AVG.)	L (Max.)	H	V	H	V	D	A	A	F		C
20	20	20	44	20	7	37	30	30	5	< 1	Good

STEP 2. Determine the multipliers and compute the RWL's

RWL = LC × HM × VM × DM × AM × FM × CM

ORIGIN RWL = 51 × .50 × .90 × .87 × .90 × .80 × 1.0 = 14.4 **Lbs**

DESTINATION RWL = 51 × .50 × .83 × .87 × .90 × .80 × 1.0 = 13.3 **Lbs**

STEP 3. Compute the LIFTING INDEX

ORIGIN LIFTING INDEX = $\frac{\text{OBJECT WEIGHT (L)}}{\text{RWL}} = \frac{20}{14.4} = 1.4$

DESTINATION LIFTING INDEX = $\frac{\text{OBJECT WEIGHT (L)}}{\text{RWL}} = \frac{20}{13.3} = 1.5$

Figure 16: Example 5, Job Analysis Worksheet

Using Table 6, the coupling is classified as **Good**. Significant control is required at the destination of the lift. Using Table 5, the FM is determined to be .80. As shown in Figure 16, the RWL is 14.4 lbs at the origin and 13.3 lbs at the destination.

3.3.2.3. Hazard Assessment

The weight to be lifted (20 lbs) is greater than the RWL at both the origin and destination of the lift (14.4 lbs and 13.3 lbs, respectively). The LI at the origin is 20/14.4 or 1.4 and the LI at the destination is 1.5. These results indicate that this lifting task would be stressful for some workers.

3.3.2.4. Redesign Suggestions

The worksheet shows that the smallest multipliers (i.e., the greatest penalties) are .50 for the HM, .80 for the FM, .83 for the VM, and .90 for the AM. Using Table 8, the following job modifications are suggested:

1. Bring the load closer to the worker to increase HM.

2. Reduce the lifting frequency rate to increase FM.

3. Raise the destination of the lift to increase VM.

4. Reduce the angle of twist to increase AM by either moving the origin and destination closer together or moving them further apart. Since the horizontal distance (H) is dependent on the width of the tray in the sagittal plane, this variable can only be reduced by using smaller trays. Both the DM and VM, however, can be increased by lowering the height of the origin and increasing the height of the destination. For example, if the height at both the origin and destination is 30 inches, then VM and DM are 1.0, as shown in the modified worksheet (Figure 17). Moreover, if the cart is moved so that the twist is eliminated, the AM can be increased from .90 to 1.00. As

shown in Figure 17, with these redesign suggestions the RWL can be increased from 13.3 lbs to 20.4 lbs, and the LI values are reduced to 1.0.

3.3.2.5. Comments

This analysis was based on a one-hour work session. If a subsequent work session begins before the appropriate recovery period has elapsed (i.e., 1.2 hours), then the eight-hour category would be used to compute the FM value.

As in the previous example, since the lifting pattern is continuous over the full duration of the work sample (i.e., more than 15 minutes), the lifting frequency is not adjusted using the special procedure described on page 27.

JOB ANALYSIS WORKSHEET

DEPARTMENT Food Service
JOB TITLE Cafeteria Worker
ANALYST'S NAME
DATE

JOB DESCRIPTION Unloading a dish-washing machine Modified Example 5

STEP 1. Measure and record task variables

Object Weight (lbs)		Hand Location (in)				Vertical Distance (in)	Asymmetric Angle (degrees)		Frequency Rate	Duration	Object Coupling
		Origin		Dest.			Origin	Destination	lifts/min	(HRS)	
L (AVG.)	L (Max.)	H	V	H	V	D	A	A	F		C
20	20	20	30	20	30	0	0	0	5	< 1	Good

STEP 2. Determine the multipliers and compute the RWL's

RWL = LC x HM x VM x DM x AM x FM x CM

ORIGIN RWL = 51 x .50 x 1.0 x 1.0 x 1.0 x .80 x 1.0 = 20.4 Lbs

DESTINATION RWL = 51 x .50 x 1.0 x 1.0 x 1.0 x .80 x 1.0 = 20.4 Lbs

STEP 3. Compute the LIFTING INDEX

ORIGIN LIFTING INDEX = $\frac{\text{OBJECT WEIGHT (L)}}{\text{RWL}} = \frac{20}{20.4} = 1.0$

DESTINATION LIFTING INDEX = $\frac{\text{OBJECT WEIGHT (L)}}{\text{RWL}} = \frac{20}{20.4} = 1.0$

Figure 17: Example 5, Modified Job Analysis Worksheet

3.3.3. Product Packaging I, Example 6

3.3.3.1. Job Description

In the job illustrated in Figure 18, products weighing 25 lbs arrive via a conveyor at a rate of 1-per minute, where a worker packages the product in a cardboard box and then slides the packaged box to a conveyor behind table B. Assume that significant control of the object is not required at the destination, but that the worker twists to pick up the product; also assume that the worker can flex the fingers to the desired 90^0 angle to grasp the container. The job is performed for a normal 8-hour shift, including regular rest allowance breaks.

3.3.3.2. Job Analysis

The task variable data are measured and recorded on the job analysis worksheet (Figure 19). At the origin, the vertical location (V) is 24 inches and the horizontal location is 14 inches. At the destination, the vertical location is 40 inches, which represents the height of table B plus the height of the box, and the horizontal location is 16 inches.

Using Table 6, the coupling is classified as **fair**. The worker twists 90^0 to pick up the product. The job is performed for an 8-hour shift with a frequency rate of 1-lift per minute. Using Table 5, the FM is determined to be .75. Since significant control is not required at the destination, then the RWL is only computed at the origin of the lift. The multipliers are computed from the lifting equation or determined from the multiplier tables (Tables 1 to 5, and Table 7). As shown in Figure 19, the RWL for this lifting task is 16.4 lbs.

3.3.3.3. Hazard Assessment

The weight to be lifted (25 lbs) is greater than the RWL (16.4 lbs). Therefore, the LI is 25/16.4 or 1.5. This task would be stressful for some healthy workers.

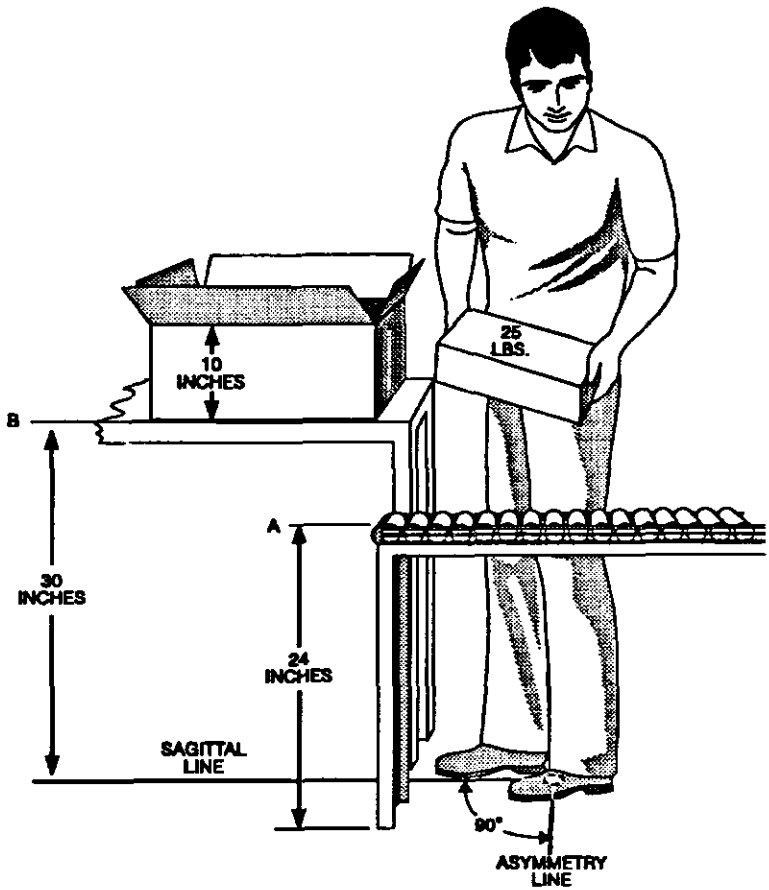

Figure 18 Packaging I, Example 6

JOB ANALYSIS WORKSHEET

DEPARTMENT Distribution
JOB TITLE Line Packer
ANALYST'S NAME
DATE

JOB DESCRIPTION
Packing products for distribution

Example 6, Product Packaging I

STEP 1. Measure and record task variables

Object Weight (lbs)		Hand Location (in)				Vertical Distance (in)	Asymmetric Angle (degrees)		Frequency Rate	Duration	Object Coupling
		Origin		Dest.			Origin	Destination	lifts/min	(HRS)	
L (AVG.)	L (Max.)	H	V	H	V	D	A	A	F		C
25	25	14	24	16	40	16	90	0	1	8	Fair

STEP 2. Determine the multipliers and compute the RWL's

RWL = LC × HM × VM × DM × AM × FM × CM

ORIGIN RWL = 51 × .71 × .96 × .93 × .71 × .75 × .95 = 16.4 Lbs

DESTINATION RWL = 51 × ___ × ___ × ___ × ___ × ___ × ___ = ___ Lbs

STEP 3. Compute the LIFTING INDEX

ORIGIN LIFTING INDEX = OBJECT WEIGHT (L) / RWL = 25 / 16.4 = 1.5

DESTINATION LIFTING INDEX = OBJECT WEIGHT (L) / RWL = ___ = ___

Figure 19: Example 6, Job Analysis Worksheet

3.3.3.4. Redesign Suggestions

The worksheet shows that the multipliers with the smallest magnitude (i.e., those providing the greatest penalties) are .71 for the HM, .71 for the AM, and .75 for the FM. Using Table 8, the following job modifications are suggested:

1. Bring the load closer to the worker to increase HM.

2. Move the lift's origin and destination closer together to reduce the angle of twist and increase the AM.

3. Reduce the lifting frequency rate and/or provide longer recovery periods to increase FM.

Assuming that the large horizontal distance is due to the size of the object lifted rather than the existence of a barrier, then the horizontal distance could only be reduced by making the object smaller or re-orienting the object. An alternate approach would be to eliminate body twist by providing a curved chute to bring the object in front of the worker. For this modified job (worksheet shown in Figure 20), the AM is increased from 0.71 to 1.0, the HM is increased from 0.71 to 0.77, the RWL is increased from 16.4 lbs to 25 lbs, and the LI is decreased from 1.5 to 1.00. Eliminating body twist reduces the physical stress to an acceptable level for most workers. Alternate redesign recommendations could include: (1) raising the height of conveyor A and/or reducing the height of work bench B; or, (2) Providing good couplings on the containers. For example, the curved chute could also be designed to bring the load to a height of 30 inches. This would increase the VM, DM, and CM values to 1.0, which would reduce the lifting index even further.

JOB ANALYSIS WORKSHEET

DEPARTMENT Distribution
JOB TITLE Line Packer
ANALYST'S NAME
DATE

JOB DESCRIPTION
Packing products for distribution

Modified Example 6

STEP 1. Measure and record task variables

Object Weight (lbs)		Hand Location (in)				Vertical Distance (in)	Asymmetric Angle (degrees)		Frequency Rate	Duration	Object Coupling
		Origin		Dest.			Origin	Destination	lifts/min	(HRS)	
L (AVG.)	L (Max.)	H	V	H	V	D	A	A	F		C
25	25	13	24	16	40	16	0	0	1	8	Fair

STEP 2. Determine the multipliers and compute the RWL's

RWL = LC × HM × VM × DM × AM × FM × CM

ORIGIN RWL = 51 × .77 × .96 × .93 × 1.0 × .75 × .95 = 25.0 Lbs

DESTINATION RWL = 51 × ___ × ___ × ___ × ___ × ___ × ___ = ___ Lbs

STEP 3. Compute the LIFTING INDEX

ORIGIN LIFTING INDEX = OBJECT WEIGHT (L) / RWL = 25 / 25.0 = 1.0

DESTINATION LIFTING INDEX = OBJECT WEIGHT (L) / RWL = ___ / ___ = ___

Figure 20: Example 6, Modified Job Analysis Worksheet

3.3.3.5. Comments:

Although several alternate redesign suggestions are provided, reducing the asymmetric angle should be given a high priority because a significant number of overexertion lifting injuries are associated with excessive lumbar rotation and flexion.

As in the earlier examples, the lifting pattern is continuous over the full duration of the work sessions. Thus, the lifting frequency is not adjusted using the special procedure described in the Frequency Component section on page 27.

3.4. Repetitive Multi-Task, Short-Duration

3.4.1. Depalletizing Operation, Example 7

3.4.1.1. Job Description

A worker unloads 12-lb cartons from a pallet onto a conveyor, as illustrated in Figure 21. The cartons are vertically stacked from the floor in five tiers. No twisting is required when picking up and putting down the cartons, and the worker is free to step on the pallet to get close to each carton (i.e., only one layer in depth from the front of the pallet must be analyzed). Walking and carrying are minimized by keeping the pallets close to the conveyor, and significant control of the object is not required at the destination of the lift. The vertical location (V) at the origin, horizontal location (H), and vertical travel distance (D), vary from one lift to the next.

3.4.1.2. Job Analysis

Since the job consists of more than one distinct task and the task variables often change, the multi-task lifting analysis procedure should be used.

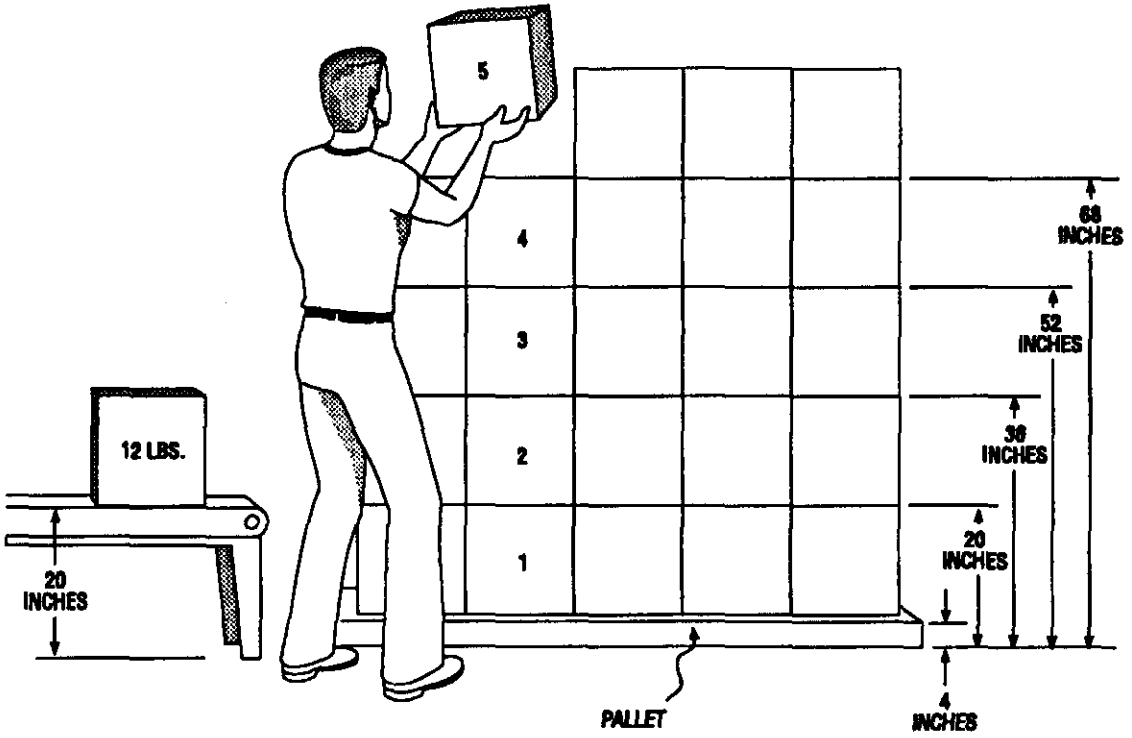

Figure 21 Depalletizing Operation, Example 7

This job is divided into five tasks representing the five tiers of loaded pallets. Task numbering is arbitrary and the sequencing does not reflect the order in which the tasks are performed. It is important, however, to identify each distinct type of lifting task. Note, it may not be appropriate to use the lifting equation for mixed-task jobs that require significant amounts of pushing, pulling, or carrying.

The following measurements/observations were made and recorded on the job analysis worksheet (Figure 22):

1. Carton dimensions are 16 inches x 16 inches x 16 inches.

2. The vertical locations at the origin represent the position of the hands under the cartons. The top of the conveyor is 20 inches from the floor.

3. For this example, assume that the horizontal locations were not measured, but estimated using the formulas provided in the Horizontal Multiplier section on page 14. From these formulas, H = (8 + 16/2) or 16 inches for the top four tiers and H = (10 + 16/2) or 18 inches for the bottom tier.

4. The pallet is 4 inches in height.

5. No asymmetric lifting is involved (i.e., A = 0).

6. Cartons are continuously unloaded at the rate of 12-per minute (i.e, 2.4 lifts/min per tier) for 1 hour.

7. The job consists of continuous 1-hour work sessions separated by 90-minute recovery periods.

8. Using Table 6, the coupling is classified as fair.

MULTI-TASK JOB ANALYSIS WORKSHEET

DEPARTMENT Recieving
JOB TITLE Warehouseman
ANALYST'S NAME
DATE

JOB DESCRIPTION Unloading boxes onto a conveyor Example 7

STEP 1. Measure and Record Task Variable Data

Task No.	Object Weight (lbs)		Hand Location (in)				Vertical Distance (in)	Asymmetry Angle (degs)		Frequency Rate lifts/min	Duration Hrs	Coupling
			Origin		Dest.			Origin	Dest.			
	L (Avg.)	L (Max.)	H	V	H	V	D	A	A	F		C
1	12	12	18	4	16	20	16	0	0	2.4	1	Fair
2	12	12	16	20	16	20	0	0	0	2.4	1	Fair
3	12	12	16	36	16	20	16	0	0	2.4	1	Fair
4	12	12	16	52	16	20	32	0	0	2.4	1	Fair
5	12	12	16	68	16	20	48	0	0	2.4	1	Fair

STEP 2. Compute multipliers and FIRWL, STRWL, FILI, and STLI for Each Task

Task No.	LC	x HM	x VM	x DM	x AM	x CM	FIRWL	x FM	STRWL	FILI = L/FIRWL	STLI = L/STRWL	New Task No.	F
1	51	.56	.81	.93	1.0	.95	20.4	.90	18.4	.6	.7	2	2.4
2	51	.63	.93	1.0	1.0	.95	28.4	.90	25.6	.4	.5	4	2.4
3	51	.63	.96	.93	1.0	1.0	28.7	.90	25.8	.4	.5	5	2.4
4	51	.63	.84	.88	1.0	1.0	23.8	.90	21.4	.5	.6	3	2.4
5	51	.63	.72	.86	1.0	1.0	19.9	.90	17.9	.6	.7	1	2.4

STEP 3. Compute the Composite Lifting Index for the Job (After renumbering tasks)

CLI =	$STLI_1$ +	$\Delta FILI_2$ +	$\Delta FILI_3$ +	$\Delta FILI_4$ +	$\Delta FILI_5$	
		$FILI_2(1/FM_{1-1} - 1/FM_1)$	$FILI_3(1/FM_{1-2-2} - 1/FM_{1-2})$	$FILI_4(1/FM_{1-2-3-4} - 1/FM_{1-2-3})$	$FILI_5(1/FM_{1-2-3-4-5} - 1/FM_{1-2-3-4})$	
		.6(1/.81-1/.9)	.5(1/.68-1/.81)	.4(1/.48-1/.68)	.4(1/.37-1/.48)	
CLI =	.7	.07	.12	.26	.26	1.4

Figure 22: Example 7, JOB ANALYSIS WORKSHEET

The multi-task lifting analysis consists of the following three steps:

1. Compute the frequency-independent-RWL (FIRWL) and frequency-independent- lifting index (FILI) values for each task using a default FM of 1.0.

2. Compute the single-task-RWL (STRWL) and single-task-lifting index (STLI) for each task. Note, in this example, interpolation was used to compute the FM value for each task because the lifting frequency rate was not a whole number (i.e., 2.4).

3. Renumber the tasks in order of decreasing physical stress, as determined from the STLI value, starting with the task with the largest STLI.

Step 1

Compute the FIRWL and FILI values for each task using a default FM of 1.0. The multi-task lifting analysis consists of the following three steps:

1. Compute the frequency-independent-RWL (FIRWL) and frequency-independent- lifting index (FILI) values for each task using a default FM of 1.0.

	FIRWL	FILI
Tier 1	20.4 lbs	.6
Tier 2	28.4 lbs	.4
Tier 3	28.7 lbs	.4
Tier 4	23.8 lbs	.5
Tier 5	19.9 lbs	.6

These results indicate that none of the tasks are particularly stressful, from a strength point of view, but that tiers 1 and 5 do require the most strength. Remember, however, that these results do not take the frequency of lifting into consideration.

Step 2

Compute the STRWL and STLI values for each task, where STRWL = FIRWL x FM. The FM for each task is determined by interpolating between the FM values for 2 and 3 lifts/minute from Column 2 of Table 5. The results are displayed in Figure 22.

	STRWL	STLI
Tier 1	18.4 lbs	.7
Tier 2	25.6 lbs	.5
Tier 3	25.8 lbs	.5
Tier 4	21.4 lbs	.6
Tier 5	17.9 lbs	.7

These results suggest that none of the tasks are stressful, if performed individually. Note, however, that these values do not consider the combined effects of all of the tasks.

Step 3

Renumber the tasks, starting with the task with the largest STLI value, and ending with the task with the smallest STLI value. If more than one task has the same STLI value, assign the lower task number to the task with the highest frequency.

3.4.1.3. Hazard Assessment

Compute the composite-lifting index (CLI) for the job, using the renumbered tasks as described in the Multi-Task procedures on page 43.

As shown on Figure 22, the CLI value for this job is 1.4. This means that some healthy workers would find this job physically stressful. Therefore, some redesign may be needed. Analysis of the results suggest that any three of these tasks would probably result in a CLI below 1.0, which would be acceptable for nearly all healthy workers. However, when the other two tasks are added, the overall frequency increases the lifting index above 1.0. This suggests that the overall frequency should be reduced to limit the physical stress associated with this job.

3.4.1.4. Redesign Suggestions

The worksheet illustrated in Figure 22 indicates that the multipliers with the smallest magnitude (i.e., those providing the greatest penalties) are .56 for the HM at Tier 1; .63 for the HM at Tiers 2 through 5; .72 for the VM at Tier 5; and .81 for the VM at Tier 1. Using Table 8, the following job modifications are suggested:

1. Bring the cartons closer to the worker to increase the HM value.

2. Lower the height for Tier five to increase the VM value.

3. Raise the height of tier one to increase the VM value.

The FILI values are all less than 1.0, indicating that strength should not be a problem for any of these tasks. Moreover, the STLI were all less than 1.0, indicating that none of the tasks would be physically stressful, if performed individually. When the combined physical demands of the tasks are considered, however, the resulting CLI exceeds 1.0. This is likely due to the high frequency rate for the combined job. Since a number of simplifying assumptions were made in this example, however, a more detailed metabolic analysis of such a job may be needed before implementing ergonomic redesign. Such an analysis is described in detail by Garg *et al.* (1978).

An engineering approach should be the first choice for job redesign (i.e., physical changes in layout, such as raising or lowering shelves, tables, or pallets) rather than worker compliance. In this case, the high frequency rate is a significant problem and should be reduced. A reduction in frequency could decrease the CLI to about 1.0.

3.4.1.5. Comments

With more complicated tasks, such a simple solution will not necessarily be possible, and more detailed analyses may be required to determine compressive forces, strength requirements, and energy expenditures.

3.4.2. Handling Cans of Liquid, Example 8

3.4.2.1. Job Description

A worker unloads cans of liquids from a cart to three storage shelves as shown in Figure 23. Although the cans are lifted in the sagittal plane when moved between shelves, they are usually lifted asymmetrically, from one side of the body to the other, when lifted from the cart to the shelves. The worker may take a step when placing the cans onto the shelf. The cans do not have molded handholds, so the worker hooks his fingers or slides his hand under the turned edge of the can to lift it. When lifting to the top shelf, workers usually reposition their grip near the end of the lift. The work pattern consists of intermittent, six-minute work sessions separated by three-minute recovery periods. The actual lifting frequency during the six-minute work sessions was 9 lifts/minute. There is a 90-minute break after each hour of work.

3.4.2.2. Job Analysis

Since the job consists of more than one distinct task and the task variables change often, the multi-task lifting analysis procedure should be used.

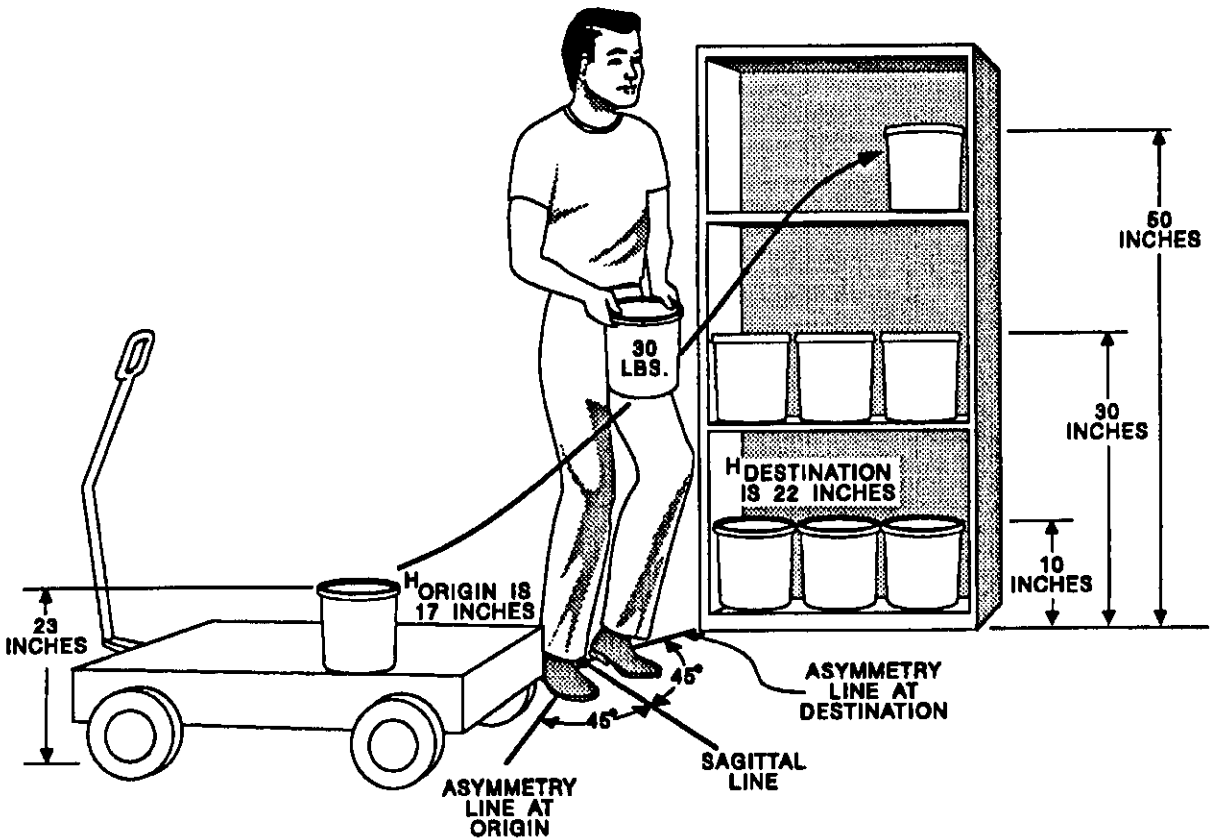

Figure 23 Handling Cans of Liquid, Example 8

This job is divided into three tasks. Task 1 is defined as lifting from the cart to the lower shelf. Task 2 is defined as lifting to the center shelf, and Task 3 is defined as lifting to the upper shelf. Since task 3 requires a reposition of grip at the destination, it must be analyzed at both the origin (Task 3a) and the destination of the lift (Task 3b). The left and right shelf positions are considered to be equivalent, since the worker can step toward the shelf during the lift.

The following task variable data were measured and recorded on the job analysis worksheet (Figure 24):

1. Cans are 8 inches in height.

2. Cart is 15 inches high.

3. Shelf 1 is 2 inches high.

4. Shelf 2 is 22 inches high.

5. Shelf 3 is 42 inches high.

6. At the origin, the horizontal distance (H) is 17 inches, the vertical height (V) is 23 inches, and the angle of asymmetry (A) is 45^0 for all lifts.

7. At the destination, H is 22 inches, and A is 45^0 for all lifts.

8. The cans are lifted in an intermittent work pattern at a rate of 9 lifts/min (i.e., 3 lifts/min per shelf) for a duration of 1 hour.
9. Using Table 6, the couplings are classified as poor.

The multi-task lifting analysis consists of the following three steps:

1. Compute the frequency-independent-RWL (FIRWL) and frequency-independent- lifting index (FILI) values for each task using a default FM of 1.0.

2. Compute the single-task-RWL (STRWL) and single-task-lifting index (STLI) for each task. Note: Since the work pattern is not continuous for the 15-minute sample, the lifting frequency is adjusted using the special procedure described on page 27.

3. Renumber the tasks in order of decreasing physical stress, as determined from the STLI value, starting with the task with the largest STLI.

Step 1

Compute the FIRWL and FILI values for each task using a default FM of 1.0. The other multipliers are computed from the lifting equation or determined from the multiplier tables (Table 1 to 5, and Table 7). The FIRWL and FILI values are computed only at the origin for Tasks 1 and 2, but since significant control is required for Task 3, the values must be computed at both the origin and destination of the lift.

	FIRWL	FILI
Task 1	21.2 lbs	1.4
Task 2	22.1 lbs	1.4
Task 3a	19.7 lbs	1.5
Task 3b	13.7 lbs	2.2

These results indicate that all of the tasks may ***require considerable strength***, especially at the destination of Task 3. Remember, however, that these results do not take the frequency of lifting into consideration.

Step 2

Compute the STRWL and STLI values for each task, where the STRWL for a task is equivalent to the product of the FIRWL and the FM for that task. In this example, the work pattern is intermittent so the frequency is adjusted using the special procedure. Thus, for this job, F = (3 lifts/minute x 6 minutes/period x 2 periods) / 15 minutes, which is equal to 36/15, or 2.4 lifts/minute. As in the previous example, the FM values must be determined by interpolating between the FM values for 2 and 3 lifts/minute from Column 2 of Table 5. The results are displayed in Figure 24 and summarized below.

	STRWL	STLI
Task 1	19.1 lbs	1.6
Task 2	19.9 lbs	1.5
Task 3a	17.7 lbs	1.7
Task 3b	12.4 lbs	2.4

These results indicate that all of the tasks would be particularly stressful, if performed individually. Note, however, that these values do not consider the combined effects of all of the tasks.

Step 3

Renumber the tasks, starting with the task with the largest STLI value, and ending with the task with the smallest STLI value. If more than one task has the same STLI value, assign the lower task number to the task with the highest frequency.

MULTI-TASK JOB ANALYSIS WORKSHEET

DEPARTMENT Paint Shop
JOB TITLE Stock Clerk
ANALYST'S NAME
DATE

JOB DESCRIPTION
Lifting cans of liquid from
from cart to shelves
Example 8

STEP 1. Measure and Record Task Variable Data

Task No.	Object Weight (lbs)		Hand Location (in)				Vertical Distance (in)	Asymmetry Angle (degs)		Frequency Rate lifts/min	Duration Hrs	Coupling
			Origin		Dest.			Origin	Dest.			
	L (Avg.)	L (Max.)	H	V	H	V	D	A	A	F		C
1	30	30	17	23	22	10	13	45	45	3	< 1	Poor
2	30	30	17	23	22	30	7	45	45	3	< 1	Poor
3	30	30	17	23	22	50	27	45	45	3	< 1	Poor

STEP 2. Compute multipliers and FIRWL, STRWL, FILI, and STLI for Each Task

Task No.	LC x	HM x	VM x	DM x	AM x	CM	FIRWL x	FM	STRWL	FILI = L/FIRWL	STLI = L/STRWL	New Task No.	F
1	51	.59	.95	.96	.86	.90	21.2	.90	19.1	1.4	1.6	2	2.4
2	51	.59	.95	1.0	.86	.90	22.1	.90	19.9	1.4	1.5	3	2.4
3a	51	.59	.95	.89	.86	.90	19.7	.90	17.7	1.5	1.7		2.4
3b	51	.46	.85	.89	.86	.90	13.7	.90	12.4	2.2	2.4	1	2.4
	51												

STEP 3. Compute the Composite Lifting Index for the Job (After renumbering tasks)

CLI =	$STLI_1$ +	$\Delta FILI_2$ +	$\Delta FILI_3$ +	$\Delta FILI_4$ +	$\Delta FILI_5$	
		$FILI_2(1/FM_{1-2} - 1/FM_1)$	$FILI_3(1/FM_{1-2-3} - 1/FM_{1-2})$	$FILI_4(1/FM_{1-2-3-4} - 1/FM_{1-2-3})$	$FILI_5(1/FM_{1-2-3-4-5} - 1/FM_{1-2-3-4})$	
		1.4(1/.8 - 1/.9)	1.4(1/.7 - 1/.8)			
CLI =	2.4	.19	.25			2.9

Figure 24: Example 8, JOB ANALYSIS WORKSHEET

3.4.2.3. Hazard Assessment

Compute the composite-lifting index (CLI) using the renumbered tasks. Recall that a special procedure is used to determine the appropriate FM values when (1) repetitive lifting is performed for short durations, and (2) sufficient recovery periods are provided. For example, the frequency for each task in this example is determined by multiplying the actual frequency rate (3 lifts per minute) times the duration (12 minutes), and dividing the result by 15 minutes to obtain an adjusted frequency rate of 2.4 lifts per minute, which is used to compute the CLI.

As shown in Figure 24, the CLI for this job is 2.9, which indicates that there is a significant level of physical stress associated with this job. It appears that strength is a problem for all three tasks, since the FILI values all exceed 1.0. Therefore, the overall physical demands of the job are primarily the result of excessive strength demands, rather than the lifting frequency rate. This may not be the case if the duration exceeds 15 minutes, due to an increase in endurance demands.

3.4.2.4. Redesign Suggestions

The worksheet illustrated in Figure 24 shows that the multipliers with the smallest magnitude (i.e., those providing the greatest penalties) are .46 for the HM for Task 3 at the destination; .59 for the HM for Tasks 1, 2, and 3 at the origin; .85 for the VM for Task 3 at the destination; .86 for the AM for all tasks at the origin and destination; and, .90 for the CM for all tasks.

Using Table 8, the following job modifications are suggested:

1. Bring the load closer to the worker to increase HM by reducing the size of the can and/or bringing the load between the worker's legs.

2. Reduce the angle of twist to increase AM by moving the origin and destination closer together or further apart.

3. Provide containers with handles or handhold cutouts to increase CM.
4. Raise the origin of the lift to increase VM.

Raising the vertical height at the origin would also decrease the vertical displacement (D), and reduce the angle of twist. Since the size of the H value at the origin depends on the size of the container, the only way to reduce H would be to reduce the container size. An additional benefit of reducing container size is an accompanying reduction in H at the destination for Task 3.

If (1) the height of the cart is increased, (2) twisting is eliminated, and (3) Task 3 is deleted, then the FIRWL for Tasks 1 and 2 would be 27.1 lbs (i.e., 51 x .59 x 1.0 x 1.0 x 1.0 x 1.0 x 0.90), and the FILI would be reduced from 1.4 to 1.1, which would be acceptable to many more workers than before.

As an alternative, an engineering modification could include a design that allows the shelves to either revolve vertically or rotate horizontally for more storage space at the optimum lifting height of 30 inches. This design would eliminate the need to bend or reach while lifting, which is a safer design.

3.4.2.5. Comments

In this example, the cans were not stacked higher than a single can on the cart. The cans, however, could be stacked higher. For a second layer, the vertical height (V) at the origin would be near knuckle height (i.e., about 31 inches). The vertical multiplier (VM) would be increased and the FIRWL would be higher than for lifting from the lowest layer, thus reducing the risk. A third layer, however, may increase the risk of overexertion injury and result in a more stressful job for some workers.

3.5. Repetitive Multi-Task, Long-Duration (> 2 hrs)

3.5.1. Product Packaging II, Example 9

3.5.1.1. Job Description

Rolls of paper weighing 25 lbs each are pulled off a moving conveyor to work stations where they are wrapped and placed in boxes, as shown in Figure 25. Conveyor delivery allows the roll to slide to the wrapping area, but the roll must be manipulated as it is wrapped. After wrapping, the roll is lifted from the table and placed in a box. The box is closed, secured, and lifted to a pallet. The worker completes this operation once per minute for a continuous duration of 8 hours. The worker does not twist when lifting the rolls of paper. The first lift (from the table to the box) requires significant control at the destination. The second lift (from box to pallet) does not require significant control at the destination.

3.5.1.2. Job Analysis

Since the job consists of more than one task, the multi-task lifting analysis procedure should be used. Task 1 consists of lifting the roll of paper from the table and placing it into a cardboard box, and Task 2 consists of lifting the loaded box from the floor onto the pallet. No asymmetric lifting is involved in either task (i.e., A = 0). The following task variable data were measured and recorded on the job analysis worksheet (Figure 26).

<u>Task 1:</u>

1. At the origin of the lift, the horizontal distance (H) is 21 inches and the vertical distance (V) is 38 inches.

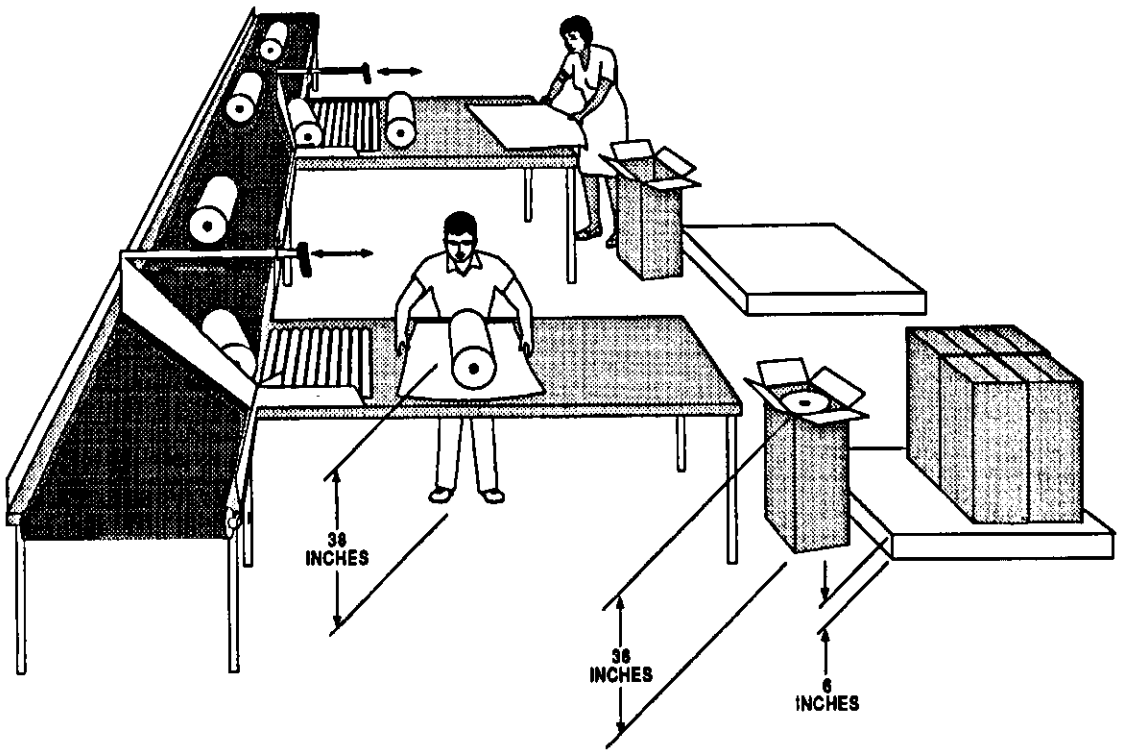

Figure 25 Product Packaging II, Example 9

MULTI-TASK JOB ANALYSIS WORKSHEET

DEPARTMENT Shipping
JOB TITLE Packager
ANALYST'S NAME
DATE

JOB DESCRIPTION
Wrapping and boxing products and lifting them to a pallet
Example 9, Product Packaging II

STEP 1. Measure and Record Task Variable Data

Task No.	Object Weight (lbs)		Hand Location (in)				Vertical Distance (in)	Asymmetry Angle (degs)		Frequency Rate lifts/min	Duration Hrs	Coupling
			Origin		Dest.			Origin	Dest.			
	L (Avg.)	L (Max.)	H	V	H	V	D	A	A	F		C
1	25	25	21	38	10	36	2	0	0	1	8	Poor
2	25	25	10	0	10	6	6	0	0	1	8	Fair

STEP 2. Compute multipliers and FIRWL, STRWL, FILI, and STLI for Each Task

Task No.	LC x	HM x	VM x	DM x	AM x	CM	FIRWL x	FM	STRWL	FILI = L/FIRWL	STLI = L/STRWL	New Task No.	F
1a	51	.48	.94	1.0	1.0	.90	20.7	.75	15.5	1.2	1.6	1	1
1b	51	1.0	.96	1.0	1.0	.90	44.1	.75	33.1	.6	.8	X	1
2	51	1.0	.78	1.0	1.0	.95	37.8	.75	28.4	.7	.9	2	1
	51												
	51												

STEP 3. Compute the Composite Lifting Index for the Job (After renumbering tasks)

CLI =	$STLI_1$ +	$\Delta FILI_2$ +	$\Delta FILI_3$ +	$\Delta FILI_4$ +	$\Delta FILI_5$	
		$FILI_2(1/FM_{1,2} - 1/FM_1)$	$FILI_3(1/FM_{1,2,3} - 1/FM_{1,2})$	$FILI_4(1/FM_{1,2,3,4} - 1/FM_{1,2,3})$	$FILI_5(1/FM_{1,2,3,4,5} - 1/FM_{1,2,3,4})$	
		.7(1/.65-1/.75)				
CLI =	1.6	.14				1.7

Figure 26: Example 9, JOB ANALYSIS WORKSHEET

2. At the destination of the lift, H is 10 inches and V is 36 inches.

3. If the rolls are handled lengthwise, as shown in Figure 25, then the couplings are classified as "poor", because the fingers can't be flexed near 90^0. (See Table 6).

Task 2:

1. At the origin of the lift, H is 10 inches and V is 0 inches.

2. At the destination of the lift, H is 10 inches and V is 6 inches.

3. The couplings are classified as "fair" because the fingers can be flexed under the box about 90^0 (See Table 6).

The lifting frequency rate for each task is 1 lift/minute. This means that two lifts occur each minute, since both Task 1 and Task 2 occur about once per minute.

The multi-task lifting analysis consists of the following three steps:

1. Compute the frequency-independent-RWL (FIRWL) and frequency-independent- lifting index (FILI) values for each task using a default FM of 1.0.

2. Compute the single-task-RWL (STRWL) and single-task-lifting index (STLI) for each task.

3. Renumber the tasks in increasing order of physical stress, as determined from the STLI value, starting with the task with the largest STLI.

Step 1

Compute the FIRWL and FILI values for each task using a default FM of 1.0. The other multipliers are computed from the lifting equation or determined from the multiplier tables (Table 1 to 5,

and Table 7). Since Task 1 requires significant control at the destination, the FIRWL value must be calculated at both the origin (Task 1a) and the destination (Task 1b) of the lift.

	FIRWL	FILI
Task 1a	20.7 lbs	1.2
Task 1b	44.1 lbs	.6
Task 2	37.8 lbs	.7

The results indicate that these tasks should ***not require excessive strength.*** Remember, however, that these results do not take the frequency of lifting into consideration.

Step 2

Compute the STRWL and STLI values for each task, where the STRWL for a task is equivalent to the product of the FIRWL and the FM for that task. Based on the given frequencies, vertical heights, and durations, the FM values are determined from Table 5.

The results are displayed in Figure 26 and summarized below.

	STRWL	STLI
Task 1a	15.5 lbs	1.6
Task 1b	33.1 lbs	.8
Task 2	28.4 lbs	.9

These results indicate that, if performed individually, Task 2 would not be stressful, but that Task 1 ***would be stressful*** for some healthy workers. Note, however, that these values do not consider the combined effects of all of the tasks.

Step 3

Renumber the tasks, starting with the task with the largest STLI value, and ending with the task with the smallest STLI value. If more than one task has the same STLI value, assign the lower task number to the task with the highest frequency.

3.5.1.3. Hazard Assessment

Compute the composite-lifting index (CLI) using the renumbered tasks. Only the origin or destination component with the largest STLI is used to compute the CLI for the job when significant control is required for a task. As shown in Figure 26, the CLI for this job is 1.7, which indicates that this job ***would be physically stressful for some healthy workers.***

3.5.1.4. Redesign Suggestions

The worksheet illustrated in Figure 26 shows that the multipliers with the smallest magnitude (i.e., those providing the greatest penalties) for this task are .48 for the HM at the origin of Task 1, .78 for the VM for Task 2, and .90 for the CM at the origin and destination of Task 1. Using Table 8, the following job modifications are suggested:

1. Bring the load closer to the worker to increase HM by reducing the size of the roll and/or bringing the load between the worker's legs at the origin for Task 1.

2. Raise the vertical height of the lift for Task 2 at the origin and at the destination to increase VM.

3. Provide better couplings for Task 1 to increase CM

The largest penalty comes from lifting the rolls from the wrapping table into the box. A practical job redesign would be to provide a recess for the box at the end of the table, so that the worker could easily slide the roll into the box without lifting it. The worker could then slide the box to the edge of the table, and lift it from the table to the pallet. This job modification would allow the worker to get closer to the load when lifting, which would increase the FIRWL and decrease the FILI.

As an alternative job modification, the worker could be rotated from this job to a job with light work every one to two hours to decrease the lifting duration. This would provide a sufficient recovery period for the worker, so that fatigue would not become a problem. The light duty work, however, should last for at least .3 times the amount of time spent on the packaging job.

3.5.1.5. Comments

There is an inherent danger in trying to simplify a complex lifting job. The overriding concern is that the worker is not exposed to excessive biomechanical or physiological stress. This multi-task analysis procedure was designed to provide a series of intermediate values that would help guide the redesign of physically demanding lifting tasks. These values include the FIRWL, FILI, STRWL, and STLI. These intermediate values should not be used as design limits, since they only provide task specific information. The overall risk of injury for a lifting job is dependent upon the combined effects of the job, rather than the individual effects of the tasks.

3.5.2. Warehouse Order Filling, Example 10

3.5.2.1 Job Description

A worker lifts cartons of various sizes from supply shelves onto a cart as illustrated in Figure 27. There are three box sizes (i.e., A, B, and C) of various weights. These lifting tasks are typical in warehousing, shipping, and receiving activities in which loads of varying weights and sizes are lifted at different frequencies. Assume that the following observations were made: (1) control of the load is not required at the destination of any lift; (2) the worker does not twist when picking up and putting down the cartons; (3) the worker can get close to each carton; and, (4) walking and carrying are minimized by keeping the cart close to the shelves.

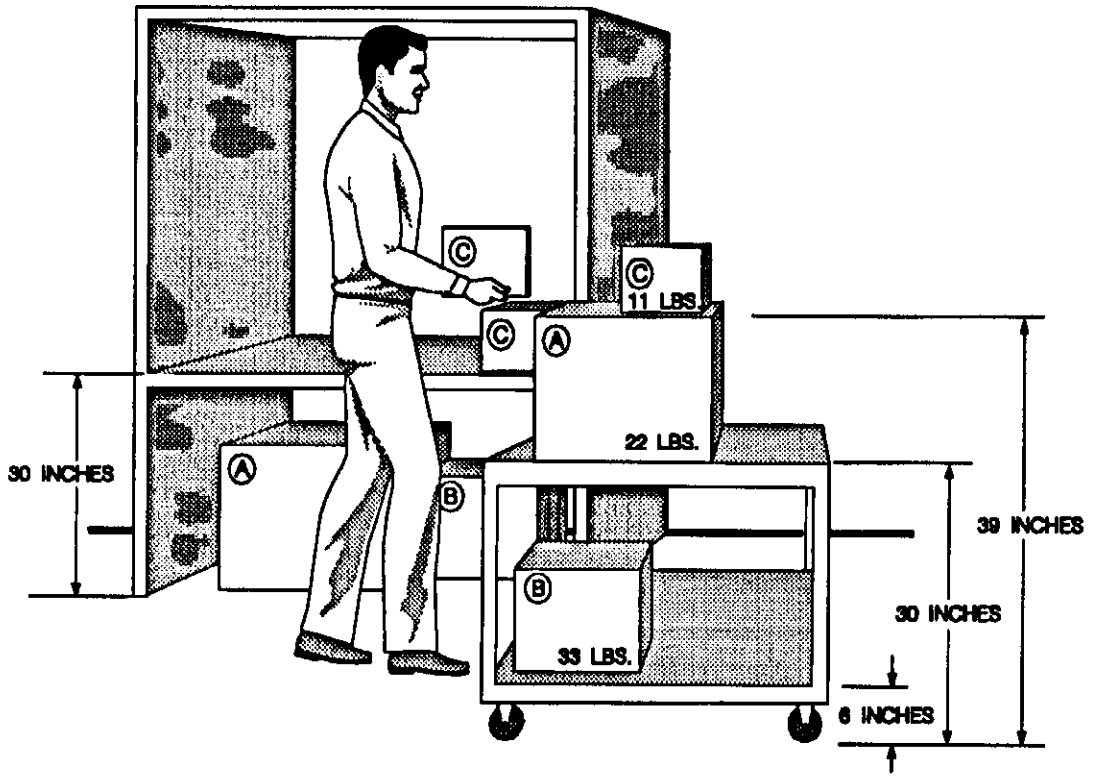

Figure 27 Warehouse Order Filling, Example 10

3.5.2.2. Job Analysis

Since the job consists of more than one distinct task and the task variables often change, the multi-task lifting analysis procedure should be used.

This job can be divided into three tasks represented by cartons A, B, and C. The following measurements were made and recorded on the job analysis worksheet (Figure 28):

1. The horizontal locations (H) for each task at the origin and destination are as follows: Box A, 16 inches; Box B, 12 inches; and, Box C, 8 inches.

2. The vertical locations (V) at the origin are taken to be the position of the hands under the cartons as follows: Box A, 0 inches; Box B, 0 inches; and, Box C, 30 inches.

3. The vertical locations (V) at the destination are the vertical position on the cart as follows: Box A, 30 inches; Box B, 6 inches; and, Box C, 39 inches.

4. The average weights lifted for each task are as follows: Box A, 22 lbs; Box B, 33 lbs; and, Box C, 11 lbs.

5. The maximum weights lifted for each task are as follows: Box A, 33 lbs; Box B, 44 lbs; and, Box C, 22 lbs.

6. No asymmetric lifting is involved (i.e., A = 0).

7. The lifting frequency rates for each task are as follows: Box A, 1 lift/min; Box B, 2 lifts/min; and Box C, 5 lifts/min.

8. The lifting duration for the job is 8 hours, however, the maximum weights are lifted infrequently (i.e., less than or equal to once every 5 minutes for 8 hours)

9. Using Table 6, the couplings are classified as fair.

MULTI-TASK JOB ANALYSIS WORKSHEET

DEPARTMENT Warehouse
JOB TITLE Shipping Clerk
ANALYST'S NAME
DATE

JOB DESCRIPTION
Selecting an order for shipment
Warehouse order filling
Example 10

STEP 1. Measure and Record Task Variable Data

Task No.	Object Weight (lbs)		Hand Location (in)				Vertical Distance (in)	Asymmetry Angle (degs)		Frequency Rate lifts/min	Duration Hrs	Coupling
			Origin		Dest.			Origin	Dest.			
	L (Avg.)	L (Max.)	H	V	H	V	D	A	A	F		C
1 (A)	22	33	16	0	16	30	30	0	0	1	8	Fair
2 (B)	33	44	12	0	12	6	6	0	0	2	8	Fair
3 (C)	11	22	8	30	8	39	9	0	0	5	8	Fair

STEP 2. Compute multipliers and FIRWL, STRWL, FILI, and STLI for Each Task

Task No.	LC x HM x VM x DM x AM x CM						FIRWL x FM		STRWL	FILI = L/FIRWL	STLI = L/STRWL	New Task No.	F
1	51	.63	.78	.88	1.0	.95	21.0	.75	15.8	1.6	1.4	2	1
2	51	.83	.78	1.0	1.0	.95	31.4	.65	20.4	1.4	1.6	1	2
3	51	1.0	1.0	1.0	1.0	1.0	51.0	.35	17.8	.4	.6	3	5
	51												
	51												

STEP 3. Compute the Composite Lifting Index for the Job (After renumbering tasks)

CLI =	$STLI_1$ +	$\Delta FILI_2$ +	$\Delta FILI_3$ +	$\Delta FILI_4$ +	$\Delta FILI_5$	
		$FILI_2(1/FM_{1\to2} - 1/FM_1)$	$FILI_3(1/FM_{1\to2\to3} - 1/FM_{1\to2})$	$FILI_4(1/FM_{1\to2\to3\to4} - 1/FM_{1\to2\to3})$	$FILI_5(1/FM_{1\to2\to3\to4\to5} - 1/FM_{1\to2\to3\to4})$	
		1.6(1/.55-1/.65)	.4(1/.18-1/.55)			
CLI =	1.6	.45	1.5			3.6

Figure 28: Example 10, JOB ANALYSIS WORKSHEET

The multi-task lifting analysis consists of the following three steps:

1. Compute the frequency-independent-RWL (FIRWL) and frequency-independent- lifting index (FILI) values for each task using a default FM of 1.0.

2. Compute the single-task-RWL (STRWL) and single-task-lifting index (STLI) for each task.

3. Renumber the tasks in order of decreasing physical stress, as determined from the STLI value, starting with the task with the largest STLI.

Step 1

Compute the FIRWL and FILI values for each task using a default FM of 1.0. The other multipliers are computed from the lifting equation or determined from the multiplier tables (Table 1 to 5, and Table 7). Recall that the FILI is computed for each task by dividing the ***maximum*** weight of that task by its FIRWL.

	FIRWL	FILI
Task 1	21.0 lbs	1.6
Task 2	31.4 lbs	1.4
Task 3	51.0 lbs	.4

These results indicate that two of the tasks require strength demands that exceed the RWL level. Remember, however, that these results do not take the frequency of lifting into consideration.

Step 2

Compute the STRWL and STLI values for each task, where the STRWL for a task is equivalent to the product of the FIRWL and the FM for that task. Recall that the STILI is computed for each task by dividing the ***average*** weight of that task by its STRWL. The appropriate FM values are determined from Table 5.

	STRWL	STLI
Task 1	15.8 lbs	1.4
Task 2	20.4 lbs	1.6
Task 3	17.8 lbs	.6

These results indicate that Tasks 1 and 2 would be stressful for some workers, if performed individually. Note, however, that these values do not consider the combined effects of all of the tasks.

Step 3

Renumber the tasks, starting with the task with the largest STLI value, and ending with the task with the smallest STLI value. If more than one task has the same STLI value, assign the lower task number to the task with the highest frequency.

3.5.2.3. Hazard Assessment

Compute the composite-lifting index (CLI) using the renumbered tasks. As shown in Figure 28, the CLI for this job is 3.6, which indicates that this job would be physically stressful for nearly all workers. Analysis of the results suggests that the combined effects of the tasks are significantly more stressful than any individual task.

3.5.2.4. Redesign Suggestions

Developing a redesign strategy for a job depends on tangible and intangible factors that may be difficult to evaluate, including costs/benefits, feasibility, and practicality. No preferred procedure has been developed and tested. Therefore, the following suggestions represent only one approach to ergonomic job modification.

In this example, the magnitude of the FILI, STLI, and CLI values indicate that both strength and endurance would be a problem for many workers. Therefore, the redesign should attempt to decrease the physical demands by modifying the job layout and decrease the physiological demands by reducing the frequency rate or duration of continuous lifting. If the maximum weights were eliminated from the job, then the CLI would be significantly reduced, the job would be less stressful, and more workers could perform the job than before.

Those lifts with strength problems should be evaluated for specific engineering changes, such as (1) decreasing carton size or removing barriers to reduce the horizontal distance; (2) raising or lowering the origin of the lift; (3) reducing the vertical distance of the lift; improving carton couplings, and 4) decreasing the weight to be lifted. The redesign priority for this example is based on identifying interventions that provide the largest increase in the FIRWL for each task (Step 2 on worksheet). For example, the maximum weight lifted for carton A is unacceptable; however, if the carton at the origin were on the upper shelf, then the FIRWL for Task 1 would increase from 21.0 lbs to 27.0 lbs. The maximum weight lifted still exceeds the FIRWL, but lifts of average weight are now below the FIRWL. Additionally, providing handles, decreasing box size, or reducing the load to be lifted will decrease the stress of manual lifting.

3.5.2.5. Comments

This example demonstrates the complexity of analyzing multi-task lifting jobs. Errors resulting from averaging, and errors introduced by ignoring other factors (e.g., walking, carrying, holding, pushing and pulling activities, and environmental stressors), can only be resolved with detailed biomechanical, metabolic, cardiovascular, and psychophysical evaluations.

Several important application principles are illustrated in this example:

1. The horizontal distance (H) for Task 3 was less than the 10.0 inches minimum. Therefore, H was set equal to 10 inches (i.e., multipliers must be less than or equal to 1.0).

2. The vertical travel distance (D) in Task 2 was less than the 10 inches minimum. Therefore, D was set equal to 10 inches.

GLOSSARY

Action Limit (AL)
A term from the 1981 WPG that denotes the weight limit that nearly all workers can perform safely. The term has been replaced in the 1991 equation with the term Recommended Weight Limit (see RWL).

Angle of Asymmetry (A)
The angle between the Asymmetric Line and the Sagittal Line of the worker's body, as defined by the worker's neutral body position; measure at the origin and destination of lift and use to compute the Asymmetric Multiplier (see Asymmetric Line, Asymmetric Multiplier, and Neutral body position).

Asymmetric Multiplier (AM)
A reduction coefficient defined as (1-(.0032A)), has a maximum value of 1.0 when the load is lifted directly in front of the body and decreases linearly as the Angle of Asymmetry (A) increases.

Asymmetry Line
The auxiliary line that connects the mid-point of the line drawn between the inner ankle bones and the point projected down to the floor directly below the center of the hand grasps.

Composite Lifting Index (CLI)
The term that denotes the overall lifting index for a multi-task manual lifting job.

Coupling Classification
The three-tiered classification of the quality of the coupling between the worker's hands and the object (either good, fair, or poor); used in the Coupling Multiplier (see CM).

Coupling Multiplier (CM)
A reduction coefficient based on the Coupling Classification and Vertical Location of the lift (values found in Table 7).

Distance Variable (D)
The vertical travel distance of the hands between the origin and destination of the lift measured in inches or centimeters; used in the Distance Multiplier (see DM).

Distance Multiplier (DM)
A reduction coefficient defined as (.82 + (1.8/D)), for D measured in inches, and (.82 + (4.5/D)), for D measured in centimeters.

Duration of Lifting
The three-tiered classification (either short, moderate, or long) of lifting duration specified by the distribution of work-time and recovery-time (work pattern).

Frequency of Lifting (F)
The average number of lifts per minute over a 15 minute period; used in the Frequency Multiplier (see FM)

Frequency Multiplier (FM)
A reduction coefficient that depends upon the Frequency of Lifting (F), the Vertical Location (V) at the origin, and the Duration of Lifting (values found in Table 5).

Frequency-Independent Lifting Index (FILI)
A term defined as (L)/(FIRWL), identifies individual tasks with potential strength problems, values exceeding 1.0 suggest that ergonomic changes may be needed to decrease the strength demands.

Frequency-Independent Recommended Weight Limits (FIRWL)
A value used in a multi-task assessment; product of all the reduction coefficients and the LC, holding FM equal to unity; reflects the overall strength demands for a single repetition of that task; used in Frequency-Independent Lifting Index (see FILI).

Horizontal Location (H)
The horizontal distance between the mid-point of the hand grasps projected down to the floor and the mid-point of the line between the inner ankle bones; used in the Horizontal Multiplier (see HM).

Horizontal Multiplier (HM)
A reduction coefficient defined as 10/H, for H measured in inches, and 25/H, for H measured in centimeters.

Lifting Index (LI)
A term defined as L/RWL; generally relates the level of physical stress associated with a particular manual lifting task to the number of workers who should be able to perform the task (see Load Weight). A value of 1.0 or more denotes that the task is hazardous for some fraction of the population.

Lifting Task
A term denoting the act of manually grasping an object of definable size and mass with two hands, and vertically moving the object without mechanical assistance.

Load Constant (LC)
A constant term in the RWL equation defined as a fixed weight of 23 kg or 51 lb; generally considered the maximum load nearly all healthy workers should be able to lift under optimal conditions (i.e. all the reduction coefficients are unity).

Load Weight (L)
A term defining the weight of the object to be lifted, in pounds or Newtons, including the container; used in the Lifting Index (see LI)

Long-duration
A term defining lifting tasks that have a duration of between two and eight hours with standard industrial rest allowances (e.g., morning, lunch, and afternoon rest breaks).

Moderate-duration
A term defining lifting tasks that have a duration of between one and two hours, followed by a recovery period of at least 0.3 times the work time [i.e., at least a 0.3 recovery-time to work-time ratio (RT/WT)].

Poor Coupling
A term defining a poor hand-to-object coupling that generally requires higher maximum grasp forces and thus specifies a decreased acceptable weight for lifting.

Recommended Weight Limit (RWL)
The product of the lifting equation; the load that nearly **all healthy workers** could perform over a substantial period of time for a specific set of task conditions.

Sagittal line
The line passing through the mid-point between the inner ankle bones and lying in the sagittal plane, as defined by the neutral body position

Short-duration
A term defining lifting tasks that have a work duration of one hour or less, followed by a recovery time equal to 1.2 times the work time [i.e., at least a 1.2 recovery-time to work-time ratio (RT/WT)].

Significant Control
A term defining a condition requiring "precision placement" of the load at the destination of the lift (e.g.: 1. the worker has to re-grasp the load near the destination of the lift, 2. the worker has to momentarily hold the object at the destination, or 3. the worker has to position or guide the load at the destination).

Single-Task lifting Index (STLI)
A term defined as (L)/(STRWL); identifies individual tasks with potentially excessive physical demands and can prioritize the individual tasks according to the magnitude of their physical stress;

values exceeding 1.0, suggest that ergonomic changes may be needed to decrease the overall physical demands of the task.

Single-Task Recommended Weight Limit (STRWL)
A value used in a multi-task assessment; the product of FIRWL and the appropriate FM; reflects the overall demands of that task, assuming it was the only task being performed. May be used to help determine if an individual task represents excessive physical demand; used in Single-Task Lifting Index (see STLI).

Vertical Location (V)
The distance of the hands above the floor measured at the origin and destination of the lift in inches or centimeters; used in the Vertical Multiplier (see VM).

Vertical Multiplier (VM)
A reduction coefficient defined as (1-(.0075 |V-30|)), for V measured in inches, and (1-(.003 |V-75 |)), for V measured in centimeters.

Width (W)
The width of the container in the sagittal plane.

REFERENCES

ASPH/NIOSH, 1986, *Proposed National Strategies for the Prevention of Leading Work-Related Diseases and Injuries, Part I*, Association of Schools of Public Health under a cooperative agreement with the National Institute for Occupational Safety and Health, Washington D.C.

Ayoub, M.M. and Mital, A. 1989, *Manual Materials Handling*, (Taylor & Francis, London).

Chaffin, D.B. and Andersson, G.B.J. 1984, *Occupational Biomechanics*, (John Wiley and Sons, New York)

DOL(BLS), 1982, Back Injuries Associated with Lifting, *Bulletin No. 2144*. U.S. Department of Labor, Bureau of Labor Statistics.

Eastman Kodak Company, Ergonomics Group, 1986, *Ergonomic Design for People at Work, Vol. 2*, (Van Nostrand Reinhold, New York)

Gallagher, S., Marras, W.S., and Bobick T.G. 1988, Lifting in stooped and kneeling postures: effects on lifting capacity, metabolic costs, and electromyography of eight trunk muscles, *International Journal of Industrial Ergonomics*, 3: 65-76.

Gallagher, S. and Unger, R.L. 1990, Lifting in four restricted lifting conditions: psychophysical, physiological and biomechanical effects of lifting in stooped and kneeling postures, *Applied Ergonomics*, 21, 237-245.

Gallagher, S. 1991, Acceptable weights and physiological costs of performing combined manual handling tasks in restricted postures, *Ergonomics*, 34(7): 939-952.

Garg, A. 1991, *Epidemiological Basis for Manual Lifting Guidelines*, NIOSH Project Report (Available from the National Technical Information Service, NTIS number 91-227-348).

Garg, A., Chaffin, D.C., and Herrin, G.D. 1978, Prediction of metabolic rates for manual materials handling jobs, *American Industrial Hygiene Association Journal*, 39(8):661-764.

National Safety Council, 1990, *Accident Facts*, National Safety Council, Chicago, Il.

NIOSH 1981, *Work Practices Guide for Manual Lifting*, NIOSH Technical Report No. 81-122, (U.S. Department of Health and Human Services, National Institute for Occupational Safety and Health, Cincinnati, OH).

Waters, T.R. 1991, Strategies for assessing multi-task manual lifting jobs, *Proceedings of the Human Factors Society 35th Annual Meeting – 1991*, San Francisco, California.

Waters, T.R., Putz-Anderson, V., Garg, A. and Fine, L.J. 1993, Revised NIOSH equation for the design and evaluation of manual lifting tasks, *Ergonomics*, 36(7):749-776.

APPENDIX I

ERGONOMICS, 1993, VOL. 36, NO. 7, 749–776

Rapid Communication

Revised NIOSH equation for the design and evaluation of manual lifting tasks

THOMAS R. WATERS‡, VERN PUTZ-ANDERSON‡, ARUN GARG¶, and LAWRENCE J. FINE‡

‡ National Institute for Occupational Safety and Health, 4676 Columbia Parkway, Cincinnati, OH 45226, USA
¶ Department of Industrial and Systems Engineering, University of Wisconsin–Milwaukee, WI 53201, USA

Keywords: Low back pain; Prevention and control; Evaluation methodology; Lifting.

In 1985, the National Institute for Occupational Safety and Health (NIOSH) convened an *ad hoc* committee of experts who reviewed the current literature on lifting, recommend criteria for defining lifting capacity, and in 1991 developed a revised lifting equation. Subsequently, NIOSH developed the documentation for the equation and played a prominent role in recommending methods for interpreting the results of the equation. The 1991 equation reflects new findings and provides methods for evaluating asymmetrical lifting tasks, lifts of objects with less than optimal hand–container couplings, and also provides guidelines for a larger range of work durations and lifting frequencies than the 1981 equation. This paper provides the basis for selecting the three criteria (biomechanical, physiological, and psychophysical) that were used to define the 1991 equation, and describes the derivation of the individual components (Putz-Anderson and Waters 1991). The paper also describes the lifting index (LI), an index of relative physical stress, that can be used to identify hazardous lifting tasks. Although the 1991 equation has not been fully validated, the recommended weight limits derived from the revised equation are consistent with or lower than those generally reported in the literature. NIOSH believes that the revised 1991 lifting equation is more likely than the 1981 equation to protect most workers.

1. Introduction

The National Institute for Occupational Safety and Health (NIOSH) first developed an equation in 1981 to assist safety and health practitioners evaluate lifting demands in the sagittal plane (NIOSH 1981). The lifting equation was widely used by occupational health practitioners because it provided an empirical method for computing a weight limit for manual lifting. This limit proved useful for identifying certain lifting jobs that posed a risk to the musculoskeletal system for developing lifting-related low back pain (Liles and Mahajan 1985). Because the 1981 equation could only be applied to a limited number of lifting tasks, namely sagittal lifting tasks, the 1981 equation was revised and expanded in 1991 to apply to a larger percentage of lifting tasks.

The 1991 lifting equation reflects new findings, provides methods for evaluating asymmetrical lifting tasks, objects with less than optimal hand–container couplings, and offers new procedures for evaluating a larger range of work durations and lifting

0014–0139/93 $10·00 © 1993 Taylor & Francis Ltd.

frequencies than the earlier equation. The objective of both equations is to prevent or reduce the occurrence of lifting-related low back pain (LBP) among workers. An additional benefit of this equation is the potential to reduce other musculoskeletal disorders or injuries associated with some lifting tasks such as shoulder or arm pain (Chaffin *et al.* 1976).

Three criteria (biomechanical, physiological, and psychophysical) were used to define the components of the original and revised lifting equation (Putz-Anderson and Waters 1991). The present document describes the rationale for selecting these criteria and demonstrates how they were used to determine the equation values. The document also discusses the limitations of the lifting equation and the use of a lifting index for identifying hazardous jobs.

The limitations of the lifting equation are a result of the small number of scientific studies related to some key hypotheses, the typical uncertainties with the conclusions of most of the scientific studies, and the inability of current clinical methods to characterize accurately the specific pathoanatomic cause of most cases of work-related low back pain or other work-related musculoskeletal disorders. In general, when faced with uncertainties in the data, the 1991 committee chose the most conservative (i.e., most protective) approach.

1.1. *Occupational factors associated with LBP*

Manual handling and lifting are a major cause of work-related LBP and impairment. LBP also can occur by direct trauma, a single exertion ('overexertion'), or potentially as the result of multiple exertions ('repetitive trauma') (Pope *et al.* 1991). Several other work-related factors including pushing or pulling activities, extreme postures such as forward flexion, and cyclic loading (whole body vibration) are also associated with development of LBP and impairment.

Low back pain also is common in work environments where no lifting or manual handling activities occur, such as work in a predominantly sitting posture (Lawrence 1955). In addition, evidence exists that work-related psychological stress and lifestyle factors also may increase the risk of LBP and the subsequent risk of prolonged impairment or desirability (Bigos *et al.* 1986, Frymoyer *et al.* 1980). Moreover, the revised lifting equation accounts for only a limited number of lifting-related task factors (seven in all), and therefore does not include adjustments for many of these other important factors. Furthermore, the lifting equation applies only to lifting tasks in which two hands are used to move the load.

Although the lifetime prevalence of LBP in the general population is as high as 70%, work-related LBP comprise only a subset of all cases of LBP in the population (Frymoyer *et al.* 1983, National Safety Council 1990). In general, the fraction of LBP which is work-related is difficult to determine in many work settings. Brown (1973) and Magora (1974) indicated that specific lifting or bending episodes were related to only about one-third of the work-related cases of LBP. Thus, even the prevention of all LBP due to lifting will not prevent all episodes of work-related pain, or prevent the common non-work-related episodes of LBP.

1.2. *Background*

The past 15 years of research on lifting-related LBP and manual lifting have produced three findings with substantial scientific support: (1) manual lifting poses a risk of LBP

Table 1. Criteria used to develop the lifting equations.

Discipline	Design criterion	Cut-off value
Biomechanical	Maximum disc compression force	3·4 kN (770 lbs)
Physiological	Maximum energy expenditure	2·2–4·7 kcal/min‡
Psychophysical	Maximum acceptable weight	Acceptable to 75% of female workers and about 99% of male workers

Note:
‡ Since the energy expenditure limit for a specific task depends on the vertical height of the lift and the duration of continuous lifting, task-specific criteria are presented in table 3.

to many workers; (2) LBP is more likely to occur when workers lift loads that exceed their physical capacities; and (3) the physical capacities of workers vary substantially.[1]

1.3. *Development and history of the 1991 lifting equation*

The 1991 lifting equation is patterned after the 1981 equation in its development, format, and interpretation (NIOSH 1981). Both versions are the product of *ad hoc* NIOSH committees of experts who reviewed the current literature on lifting, met, discussed the existing criteria for defining lifting capacity, and developed a lifting equation. When the 1991 equation was developed, however, NIOSH staff prepared the documentation for the lifting equation and played a prominent role in recommending methods for interpreting the results of the equation.[2]

The 1991 committee's deliberations represented a unique compromise between empirical findings and expert judgment, particularly when results were contradictory, inconsistent, or simply limited. The main product of the 1991 committee was the revised NIOSH lifting equation that appears in Appendix A.

2. Basis for selecting the criteria

Both the 1981 and 1991 lifting equations are based on three criteria derived from the scientific literature and the combined judgment of experts from the fields of biomechanics, psychophysics, and work physiology (table 1). In general, the criteria chosen by the NIOSH *ad hoc* committees (1981 and 1991) were used as a basis to develop an equation for determining a recommended weight limit for a specific task. The recommended weight limit for a task represents a load value that nearly all healthy workers could perform over a substantial period of time (e.g., up to 8 h) without an increased risk of developing lifting-related LBP.

Several criteria were used to develop the equation because each lifting task imposes different biomechanical and physiological requirements on the worker. As a result, the limiting factor or criteria in each lifting task may vary. The biomechanical criterion limits the effects of lumbosacral stress, which is most important in *infrequent lifting tasks*. The physiological criterion limits the metabolic stress and fatigue associ-

[1] Physical capacities include static and dynamic strength as well as various anatomical and physiological capacities such as flexibility, cardiovascular (aerobic) capacity, and tissue tolerance and recovery capacities.

[2] The *ad hoc* 1991 NIOSH Lifting Committee members included M. M. Ayoub, Donald B. Chaffin, Colin G. Drury, Arun Garg, and Suzanne Rodgers. NIOSH representatives included Vern Putz-Anderson and Thomas R. Waters (see NTIS 1991).

Table 2. Individual criterion and equation comparisons.

	Estimated criterion-based weight loads (kg)			1991 equation
Lifting* examples	Biomechanical[a]	Physiological[b]	Psychophysical[c]	RWL
Task 1	24	> 24	14	10
Task 2	> 24	> 24	13	13
Task 3	20	7	8	6
Task 4	24	6	12	4

Notes:
* each of the four tasks are described in the Appendix, Part C;
[a] based on 350 kg disc compressioin force;
[b] based on 3·1 kcal/min for Tasks 1, 2, and 4, and 2·2 kcal/min for Task 3;
[c] based on maximum weight of lift acceptable to 75% of females; Tasks 1–3 are based on Snook and Ciriello (1991) and Task 4 is based on Ayoub *et al.* 1978.

ated with *repetitive lifting tasks.*[3] The psychophysical criterion limits the workload based on the workers' perception of their lifting capability, a measure applicable to *nearly all lifting tasks*, except high-frequency lifting (above 6 lifts per min).

Ideally, the criteria chosen to establish the lifting equation should be based on a scientifically supported, quantitative relationship between the criteria and the actual risk of lifting-related musculoskeletal injury or LBP. Since this approach is not currently feasible, the lifting criteria, for the most part, are based on secondary or surrogate measures of injury or LBP. For each of these secondary measures, there is a variable amount of scientific or semi-quantitative evidence to indicate that the chosen lifting criteria can reliably predict the risk of lifting-related LBP.

Because each criterion focuses on different aspects of lifting stressors, recommended load weights that meet one criterion may not meet the others. For example, metabolic data suggest that it is more efficient to lift heavier weights less frequently that to lift lighter weights more frequently; however, biomechanical studies suggest that the load should be minimized by lifting lighter weights more frequently to reduce muscle and vertebral stresses. Furthermore when lifting from the floor, results from psychophysical studies suggest that workers can typically lift heavier loads than those estimated from biomechanical or physiological studies. Hence, load recommendations for lifting often vary depending on which criteria are applied.

Because each criterion may provide a unique load limit for a specified lifting task, the 1991 committee designed the lifting equation to provide, in general, the most conservative load limit allowed by any individual criterion.

An example of this approach is provided in table 2. The details of how the values were determined is provided in the Appendix , Part C. In table 2, estimated load limits are presented for four sample lifting tasks that are based solely on each criterion. The last column shows the 1991 equation values, which as noted, are lower than values based on the individual criterion. As discussed in section 7, the lower recommended weight limit values are primarily attributed to the multiplicative nature of the equation.

Differences between the physiologically-based weights and the recommended weight limit (RWL) values vary depending on how many factors are drawn into the

[3] The effects of local muscle fatigue are discussed in section 4.

equation (i.e., frequency, asymmetry, vertical factor, etc., as required to analyse the lifting task).

3. Biomechanical criterion

Three issues underlie the 1991 committee's selection of the biomechanical criterion for the NIOSH lifting equation: (1) the choice of joint between the L5 and S1 vertebral segments (L5/S1) as the site of greatest lumbar stress during lifting; (2) the choice of compressive force as the critical stress vector; and (3) the decision to select 3·4 kN as the compressive force that defines an increased risk of low-back injury.

3.1. *Site of greatest lumbar stress during lifting*

An established biomechanical hypothesis is that the capacity for infrequent lifts is a combined function of the individual's muscle strength and the strength of various body structures, particularly the lumbar spine. Studies have confirmed that lifting under certain conditions is limited more by the stresses on the lumbar spine than by limitations of strength (Chaffin and Moulis 1969). Moreover, when manual lifting is modelled, large moments are created in the trunk area, especially when the load cannot be held close to the body (Chaffin and Andersson 1984). Because the disc between L5 and S1 vertebrae has the potential to incur the greatest moment in lifting and is also one of the most vulnerable tissues to force-induced injuries, many investigators have sought to obtain estimates of the biomechanical stresses for the L5/S1 disc (Chaffin 1969, Tichauer 1971, Krusen *et al.* 1965, Garg *et al.* 1982, Anderson *et al.* 1985).

3.2. *Compressive force as the critical stress vector*

During lifting, three types of stress vectors are transmitted through the spinal musculoskeletal tissues to the L5/S1: compressive force, shear force, and torsional force. The relative importance of each stress vector is not well understood. Disc compression is believed to be largely responsible for vertebral end-plate fracture, disc herniation, and resulting nerve root irritation (Chaffin and Andersson 1984). Moreover, large compression forces at the L5/S1 spinal disc can be produced by muscular exertion, especially during lifting (Chaffin and Andersson 1984). Herrin *et al.* (1986) concluded that 'the biomechanical criterion of maximal back compression appears to be a good predictor not only of risk of low-back incidents but of overexertion injuries in general'. Because of the clinical interest in disc diseases and their causes, numerous studies have been conducted to assess the compressive strength of the lumbar vertebral bodies and intervertebral discs. As a result of these and similar findings, and the accompanying uncertainty regarding the effects of shear and torsional stresses on lumbar tissue, disc compressive force was chosen by the 1991 committee as the critical stress vector underlying the biomechanical criterion used to develop the lifting equation.

3.3. *Determining the compressive force that defines increased risk*

Because *in vivo* measures of compressive force are difficult, if not impossible, to undertake with current technology, the 1991 committee reviewed data from cross-sectional field studies that provided estimates of compressive forces generated by lifting tasks and subsequent injuries. Ultimately, prospective studies are needed to identify compressive force levels at the L5/S1 joint that increase risk of low-back injury.

3.3.1. *Cadaver data*: These data have been used to evaluate the strength of lumbar specimens to withstand applied compressive force. With data collected for 307 lumbar segments from various studies, Jager and Luttman (1989) determined the compressive strength of the lumbar segments and found a mean value of 4·4 kN with a standard deviation of 1·88 kN. These results suggest that if the data were normally distributed, approximately 30% of the lumbar segments had an ultimate compressive strength of less than 3·4 kN and 16% had an ultimate compressive strength of less than 2·5 kN (1 standard deviation less than the mean). Since the distribution pattern of data was not provided, however, we cannot accurately predict the percentage of lumbar segments with maximum compressive strength values less than 3·4 kN.

Brinckmann *et al.* (1988) found maximum compressive strength values for vertebral segments ranging from 2·1 to 9·6 kN. The data indicate that fewer than 21% of the cadaver spinal segments fractured or experienced end-plate failure at loads below 3·4 kN, whereas only one segment failed at loads below 2·5 kN.

Cadaver studies generally show large variability in the measured compressive strength of the spine within and between studies. This may be due to declines in lumbar strength with age, bone mineral content, and degenerative changes (Hansson and Roos 1981). Typically, the data showed that as the compressive force on the spine increased, there was an increase in the percentage of vertebra which were damaged. For a small fraction of vertebra, damage occurred at compressive force levels as low as 2·5 kN. One of the limitations of the vertebra compressive strength data is uncertainty whether compression injury to vertebra in cadaver studies is a reliable predictor of the risk of lifting-related low back pain, impairment, or disability.

3.3.2. *Biomechanical models*: These models have been used to estimate *in vivo* compressive forces on the L5/S1 intervertebral joint and disc. Chaffin (1969) developed one of the first widely applied biomechanical models, based on a refinement of the Morris *et al.* (1961) static sagittal-plane (SSP) model. Chaffin's model included only two sources of internal forces for resisting the external load moment of lifting: (1) the action of the extensor erector spinae muscle; and (2) the stabilizing force provided by the pressure of the abdominal cavity. The model predicted compressive forces for the lumbosacral disc. These predicted forces were based on the weight of the load and its distance from the base of the spine. More complex biomechanical models have been developed, but each model requires specific assumptions and simplifications (Gracovetsky and Farfan 1986, McGill and Norman 1986, and Bean *et al.* 1988). In general, each model provides somewhat different estimates of spinal compressive forces.

In the future, compressive forces may be predicted more accurately by biomechanical models that consider the dynamic components of lifting, possible antagonistic muscle forces, passive tissue loading, and the three dimensional loading characteristics of the muscles. The dynamic component of lifting may be especially important for understanding the cause of back injury. Specifically, a number of investigators have reported that lifts with high acceleration components produce greater predicted compressive forces on the spine than lifts in which the acceleration is assumed to be zero. The estimated compressive values for the dynamic models ranged from 19% to 200% greater than the static model predictions (Garg *et al.* 1982, Leskinen *et al.* 1983, Freivalds 1984, McGill and Norman 1985, Bush-Joseph *et al.* 1988, Marras and Sommerich 1991a, 1991b). Because the 1991 committee lacked data linking the pre-

dicted dynamic compressive forces to the observed incidence of lifting-related LBP, the committee chose the simpler and older model to develop the force criterion for disc compression.

Four studies have reported a direct relationship between lifting-related LBP and predicted static compressive force on the L5/S1 disc (Herrin *et al.* 1986, Bringham and Garg 1983, Anderson 1983, Chaffin and Park 1973). In a retrospective study, Herrin *et al.* (1986) evaluated 55 industrial jobs using a biomechanical model. The study sample consisted of 2934 potentially stressful manual materials handling tasks. The investigators traced the medical reports of 6912 incumbent workers employed in these jobs. For jobs with predicted compressive forces between 4·5 kN (1000 lb) and 6·8 kN (1500 lb), the rate of back problems was more than 1·5[4] times greater than that for jobs with compressive forces below 4·5 kN.

In another study, Bringham and Garg (1983) reported that jobs in which workers experienced muscular strains had an average estimated compressive force of 5·34 kN. Furthermore, jobs in which workers had disc injuries had an average estimated compressive force of 7·97 kN. In a similar study, Anderson (1983) reported that when males performed lifting jobs with a predicted compressive force exceeding 3·4 kN, they had a 40% higher incidence rate of LBP than did males employed in jobs with predicted compressive forces below that level. Chaffin and Park conducted a similar study relating compressive force to injury incidence, as cited in the *Work Practices Guide for Manual Lifting* (NIOSH 1981). Although their study cannot be used to determine the difference in injury incidence rates for jobs with compressive forces above and below 3·4 kN, they suggested that (1) the LBP incidence for repetitive lifting tasks was less than 5% when the predicted compressive force on the L5/S1 joint was below 2·5 Kn, and (2) the incidence rate increased to more than 10% when the predicted compressive force exceeded 4·5 kN.

3.4. *Biomechanical conclusions*

The 1991 committee recognized the limitations and uncertainties of biomechanical modelling of the lumbar spine. Even the most complex models only provide estimates of the *relative* magnitude of the compressive force rather than provide reliable estimates of *absolute* force levels. In general, the committee based its final determination for the biomechanical criterion (i.e., 3·4 kN) on data from field studies in which some quantitative data were provided linking compressive force estimates with the incidence of low-back disorders. Given the limitations and variability of the data linking compressive force and injury incidence, the 1991 NIOSH committee decided to maintain the 1981 biomechanical criterion of 3·4 kN compressive force for its revision of the 1991 lifting equation.

3.5. *NIOSH perspective*

The NIOSH perspective independent of the 1991 committee, is that a maximum compressive force of 3·4 kN on the L5/S1 vertebrae may not protect the entire workforce for two principal reasons: (1) data from some of the workplace studies suggest that even in survivor workplace populations, jobs with compressive forces below

[4] In the published article, the incidence rate of back problems for jobs with maximum back compression between 4·5 kN and 6·8 kN was incorrectly reported as 109/200,000 h or 18 times the rate for jobs with disc compression below 4·5 kN. The actual rate was 9/200,000 h, or 1·5 times the rate for jobs with maximum disc compression force below 4·5 kN (based on personal correspondence with the NIOSH project director for this study).

3·4 kN were associated with an increase in the risk of back injuries; and (2) data from laboratory cadaver studies indicate that some members of the general population may suffer end-plate failure when performing lifts that create compressive forces below 3·4 kN.

4. Physiological criterion

The 1991 committee selected the physiological criterion of energy expenditure to limit loads for *repetitive lifting*. A main reason is that dynamic activities such as walking, load carrying, and repeated load lifting use more muscle groups than infrequent lifting tasks. Because the aerobic energy demands of dynamic lifting tasks require multiple muscle groups to move both the load and the body, large energy expenditures are required to supply the muscles with sufficient oxygen for contraction. Without oxygen to release adenosine triphosphate (ATP), prolonged dynamic activity cannot be sustained. When the metabolic demands of dynamic and sustained activity exceed the energy producing capacity of a worker, muscle contraction is affected and whole body fatigue is usually experienced (Astrand and Rodahl 1986).

Since it is assumed that the lifts are made within a 3 s time frame, local muscle fatigue should not develop. Moreover, local muscle fatigue that could develop from high-frequency repetitive lifting or from heavy workloads is limited by the values in the frequency multiplier table that are provided with the equation (Rodgers *et al.* 1991). Heavy workload is defined as muscular exertion > 70% of maximum voluntary contraction.

Although there is limited empirical data demonstrating that whole body fatigue increases the risk of musculoskeletal injury, the 1991 committee recognized that repetitive lifting tasks could easily exceed a worker's normal energy capacities, causing a premature decrease in strength and increasing the likelihood of injury (Lehmann 1958, Brown 1972, Garg and Saxena 1979). To control excessive fatigue, a baseline maximum aerobic capacity was established to determine maximum expenditure for repetitive lifting tasks. A criteria designed to limit excessive whole body fatigue, however, does not necessarily protect against the potentially hazardous *cumulative effects* of repetitive lifting.

Three important decisions underlie the 1991 committee's selection of the baseline maximum aerobic capacity and resultant limits for task specific energy expenditures: (1) the *choice* of 9·5 kcal/min as the baseline measure of maximum aerobic lifting capacity used to determine the energy expenditure limits for repetitive lifting tasks; (2) the *choice* of the percentage (70%) of baseline maximum aerobic capacity used to establish an energy expenditure limit for lifts that predominantly require arm work (i.e., lifts above 75 cm or 30 inches); and (3) the *choice* of three percentages (50%, 40%, and 33%) of baseline maximum aerobic lifting capacity to establish energy expenditure limits for lifting tasks lasting 1 h, 1 to 2 h, and 2 to 8 h, respectively.

4.1. *Rationale for the baseline maximum aerobic capacity*

Aerobic capacity varies widely among workers according to age, sex, physical fitness, etc. (Astrand and Rodahl 1986). Average maximum aerobic capacities, assessed using treadmill procedures, have been reported for 20-year-old conditioned male workers to be as high as 20 kcal/min and as low as 7·3 kcal/min for 55-year-old female workers (Astrand and Rodahl 1986, Coleman and Burford 1971). In general, older workers have a lower capacity than younger workers, and female workers have a lower capacity

Table 3. Task-specific energy expenditure limits for frequent lifting (kcal/min).

Lift location (V) cm (in.)	Duration of lifting		
	< 1 h	1–2 h	2–8 h
$V \leq 75$ (30)	4·7	3·7	3·1
$V > 75$ (30)	3·3	2·7	2·2

than male workers. To a moderate extent, physical conditioning also may increase an individual's aerobic capacity to perform repetitive lifting (Astrand and Rodahl 1986).

In order to determine energy expenditure limits for repetitive lifting as shown in table 3, the 1991 committee selected a baseline maximum aerobic capacity that could be adjusted to accommodate different lifting conditions. Most existing measures of maximum aerobic capacity were obtained from subjects using a treadmill test. According to Petrofsky and Lind (1978a, 1978b), however, the maximum aerobic capacity measures obtained using a treadmill test overestimate the maximum aerobic capacity available for performing repetitive lifting tasks (Rodgers *et al.* 1991). As a result, the 1991 committee reduced the baseline aerobic capacity from the 1981 value of 10·5 kcal/min to 9·5 kcal/min to adjust for the difference between treadmill data and data collected from manual lifting studies. (A value of 9·5 kcal/min is equivalent to a capacity of 4000 kcal per day for a 420 min period of work.) The 1991 committee selected this value as the assumed mean aerobic *lifting* capacity of the average (50th percentile) 40-year old female worker (Eastman Kodak 1986). This baseline aerobic capacity was subsequently adjusted for various lifting locations and durations of repetitive lifting (table 3 and Appendix B).

Although the 1991 committee chose a physiological criterion that represented the capacity of a 50th percentile female, rather than the capacity of the 75th percentile female, they were not necessarily endorsing a 50th percentile criterion. The committee recognized that the multiplicative nature of the equation would provide a final weight limit that would be lower than a weight limit generated solely on the basis of the 50th percentile female physiological criterion. Their decision seems to be appropriate considering the effects of the other factors in the equation. For example, the RWL values for the repetitive tasks in table 2 (Tasks 3 and 4) are lower than the weight limits derived solely from the physiological criterion.

The committee's raionale for choosing the physiological criterion also was based on the belief that: (1) workers often can vary their lifting pace; and (2) vary their activities to reduce accumulated fatigue (Rodgers *et al.* 1991). Hence, in situations in which workers are unable to exercise some control over their rate of work, the recommended weight limits for repetitive lifting jobs could be excessive for workers who are not well conditioned, leading to both local and systemic fatigue

Further research on paced lifting is needed to determine if the revised lifting equation is suitable for such conditions.

4.2. *Rationale for task-specific energy expenditure limits*

4.2.1. *Adjustments for vertical lifting locations*: Whole-body work is required when lifts are below waist level (i.e., when they involve the leg, low back, shoulder, and arm muscles, such as when $V <$ about 75 cm or 30 in), but lifts above waist level require primarily the shoulder and arm muscles. Since an arm lift requires less muscular

activity than a whole body lift, the maximum energy *expenditure* also is less for an arm lift. However, the maximum aerobic *capacity* for arm work is also lower (about 70%) than that attained for whole-body aerobic activity (Astrand and Rodahl 1986, Sharp *et al.* 1988). Hence, both work capacity and energy expenditure are reduced for arm lifts. As a result, the 1991 committee recommended a 30% reduction in the energy expenditure limit of 9·5 kcal/min for lifting acts involving primarily the upper body (i.e. $V > 75$ cm or 30 in).

4.2.2. *Adjustments for durations of repetitive lifting*: To avoid high levels of whole-body fatigue, the 1991 committee concluded that the energy expenditure for repetitive lifting must also be based on limits that apply to the duration of the task. Most studies and reviews recommend work limits of approximately 33% of the maximum aerobic capacity for repetitive lifting tasks that are longer than two hours (Asfour *et al.* 1988, Karwowski and Yates 1986, Legg and Pateman 1984, Mital 1984a, Williams *et al.* 1982).

To adjust energy expenditure values for the aerobic demands posed by different durations of repetitive lifting tasks, the 1991 committee selected the following limits: (1) Repetitive lifting tasks *lasting 1 h or less* should not require workers to exceed 50% of the 9·5 kcal/min baseline maximum aerobic capacity value; (2) repetitive lifting tasks *lasting 1 to 2 h* should not require workers to exceed 40% of the 9·5 k/cal/min baseline; and (3) repetitive lifting tasks *lasting 2 to 8 h* should not require workers to exceed 33% of the 9·5 kcal/min baseline. The 1991 committee did not provide energy expenditure limits for tasks lasting more than 8 h.

4.3. *Physiological conclusions*

The goal of the 1991 committee was to prevent systemic or aerobic fatigue and possibly local muscle fatigue that might increase the risk of lifting-related low back pain for a *majority of physically fit workers* engaged in repetitive manual lifting. As a result, the 1991 committee computed the energy expenditure limits displayed in table 3, based on a maximum aerobic lifting capacity of 9·5 kcal/min. Further research is needed to validate the energy expenditure limits for the lifting conditions in table 3.

4.4. *NIOSH perspective*

The NIOSH perspective, independent of the 1991 committee, is that a baseline aerobic lifting capacity of 9·5 kcal/min limit may be too high, particularly for older workers, since it could fail to *prevent fatigue even in some healthy workers*. Some studies indicate that both younger and older workers may have maximum aerobic capacities below 9·5 kcal/min. In general, the relationship between fatigue and risk of back injury is not sufficiently established to determine precisely the level of excess risk for jobs that exceed the energy expenditure limits in table 3. Additionally, the physiological criteria may not prevent dysfunction or damage to the tissues of the low back from the repetitive nature of lifting even if whole body fatigue is successfully prevented.

5. Psychophysical criterion

The psychophysical criterion is based on data defining workers' strength and capacity to perform manual lifting at different frequencies for different durations. The psychophysical criterion is defined directly by measures of maximum-acceptable-weight-of-lift and indirectly from studies measuring isometric strength. Although strength is an important determinant of the capability of an individual to perform an infrequent or

occasional lift, 'capability (maximum-acceptable-weight-of-lift) appears to be substantially lower than isometric or isotonic strength maxima' (Ayoub and Mital 1989).

The critical issues for the psychophysical criterion are as follows: (1) the rationale of the 1991 committee for choosing a criterion acceptable to 75% of female workers; and (2) the rationale for using maximum-acceptable-weight-of-lift and strength to determine recommended weight limits.

5.1. *Rationale for choosing the acceptability criterion*

The maximum-acceptable-weight-of-lift is the amount of weight a person chooses to lift under given conditions for a defined period. In measurements of maximum-acceptable-weight-of-lift, workers typically are asked to 'work as hard as you can without straining yourself, or without becoming unusually tired, weakened, overheated, or out of breath' (Snook and Ciriello 1991). The maximum-acceptable-weight-of-lift provides an empirical measure that appears to integrate both biomechanical and physiological sources of stress for all but certain high-frequency lifting tasks (Karwowski and Ayoub 1984). Unlike maximum strength measures, which define what a person can do on a single attempt, the maximum acceptable measure defines what a person can do repeatedly for an extended period without excessive fatigue, which may lead to lifting-related low back pain.

5.2. *Relating maximum-acceptable-weight-of-lift to low back pain*

The 1991 committee selected the psychophysical criterion based on several studies that relate the incidence and severity of lifting-related low back pain to the extent to which lifting demands are judged acceptable to experienced workers. Specifically, injuries increased for lifting tasks rated acceptable by less than 75% to 90% of the workers (Snook 1978, Herrin *et al.* 1986). Snook (1978) summarized his findings as follows:

> The results revealed that approximately one-quarter of policyholder jobs involve manual handling tasks that are acceptable to less than 75% of the workers; however, one-half of the low back injuries were associated with these jobs. This indicates that a worker is three times more susceptible to low back injury if performing a manual handling task that is acceptable to less than 75% of the working population. This also indicates that, at best, two out of every three low back injuries associated with heavy manual handling tasks can be prevented if the tasks are designed to fit at least 75% of the population. The third injury will occur anyway, regardless of the job.

Several investigators reported that workers who have experienced back injury typically rate the physical effort in their jobs as greater than workers on similar jobs who have not had back injury (Magora 1970, Dehlin *et al.* 1976). Herrin *et al.* (1986) also reported that the rate of medical back incidents (i.e., sprains, strains, degenerative disc disease, and other ill-defined pain) increased significantly for jobs with strength demands that exceeded the lifting capability (i.e. the maximum acceptable weight) of 90% of the exposed workers.

The 1991 committee selected the psychophysical criterion to ensure that the job demands posed by manual lifting would not exceed the acceptable lifting capacity of about 99% of male workers and 75% of female workers—or 90% of the working population (if one assumes a working population that is 50% male and female).

Table 4. Psychophysical and equation-based weight loads (kg).

	Female per cent acceptability		1991 equation
Lifting tasks*	75%	90%	RWL
Small *H*, small *V* *H* = 37 cm *V* = 78·5 cm	18	16	15
Small *H*, large *V* *H* = 37 cm *V* = 154 cm	16	14	12
Large *H*, small *V* *H* = 58 cm *V* = 78·5 cm	17	14	10
Large *H*, small *V* *H* = 58 cm *V* = 154 cm	12	10	8

Note:
* Assuming *FM*, *DM*, *AM*, and *CM* are idealized (i.e., = 1);
Snook and Ciriello, 1991.

5.3. *Psychophysical conclusions*

The psychophysical approach provides a method to estimate the combined effects of biomechanical and physiological stressors of manual lifting. Because it relies on self-reporting from subjects, the perceived 'acceptable' limit may differ from the actual 'safe' limit. Even though there is a relationship between the 'acceptable' and the 'safe' limit, the psychophysical approach may not be equally valid for all combinations of task variables. For example, most data indicate that the psychophysical approach overestimates workers' capacity for high-frequency lifting (> 6 lifts/min) (Ciriello and Snook 1983, Asfour *et al.* 1985, Karwowski and Yates 1986). The psychophysical approach also may overestimate capacity for lifting lasting more than about 1 h (Mital 1983). Fernandez and Ayoub (1987) and Ciriello *et al.* (1990), however, have recently refuted this concept. Fernandez and Ayoub found that the MAWL did not decrease significantly over time. Ciriello *et al.* (1990) also found that psychophysical methods, when properly administered, do not overestimate lifting capacity in tasks lasting up to four hours.

5.4. *NIOSH perspective*

The NIOSH perspective, independent of the 1991 committee, is that the psychophysical criterion of 'acceptability to 75% of female workers' does not treat men and women equally. Nevertheless as shown in tables 4 and 5, the 1991 equation yields recommended weight limits (RWLs) that are lower than weights acceptable to at least 90% of females. Hence, the 1991 equation provides a more equitable assessment of potentially hazardous lifting tasks for women than would be apparent from the psychophysical criterion alone (i.e., acceptable to 75% of females). For example, table 4 displays load weights (kg) from Snook and Ciriello (1991) for a series of typical lifting tasks involving variations in the horizontal (*H*) and vertical (*V*) factors. Also supplied are the corresponding RWLs computed from the 1991 equation. All four of the examples produced RWLs that were lower in weight than comparable psychophysical values acceptable to 90% of the females. In general, the values provided by the 1991

Table 5. Comparison of recommended weight limits with Snook and Ciriello's maximum acceptable weight limit for 90% of female workers.*

Vertical displacement of lift (cm)	Horizontal distance of load from body (cm)	Vertical starting height of lift (cm)	Recommended weight limit (kg) RWL	Snook and Ciriello's 1991 maximum acceptable weight limit for 90% of female workers (kg)
		Floor–knuckle		
25	37	26	10·0	11
	45	26	8·2	9
	58	26	6·3	9
51	37	12·5	8·7	11
	45	12·5	7·1	9
	58	12·5	5·5	8
76	42	0	7·1	9
	50	0	5·9	8
	63	0	4·7	7
		Knuckle–shoulder		
25	37	92	11·1	12
	45	92	9·2	10
	58	92	7·1	10
51	37	78·5	10·6	10
	45	78·5	8·7	9
	58	78·5	6·7	9
76	37	66	10·0	9
	45	66	8·3	9
	58	66	6·3	9
		Shoulder–reach		
25	37	154	8·9	10
	45	154	7·3	8
	58	154	5·6	8
51	37	141	8·5	9
	45	141	7·0	7
	58	141	5·4	7
76	37	128	8·7	8
	45	128	7·1	7
	58	128	5·5	6

Note:
* Evaluated at a task frequency (F) of 1 lift/min.

equation are consistent with or lower than the average lifting weights for task conditions reported by Snook and Ciriello. Those weight limits were acceptable to 90% of the females (table 5).

6. Derivation of the equation components

Following the selection of the individual criterion, the 1991 committee developed the revised lifting equation (Appendix A). This section presents the derivation of the revised lifting equation and explains how the criteria were used to develop the individual components. The discussion addresses the standard lifting location, the load constant, and the derivation of the mathematical expressions (multipliers). Each

component of the revised lifting equation (Appendix A) was designed to satisfy the lifting criteria and was based, to the extent possible, on the results of quantitative research studies. Where the data were conflicting, however, decisions affecting the multipliers were based on a consensus of the 1991 committee. In most cases, the final decisions represented the most conservative (i.e. the most protective) estimates of lifting capacity.

The development of the lifting equation required that: (1) a standard lifting location be defined; (2) a load constant for the equation be established; and (3) the mathematical expressions for each factor be derived.

6.1. *Defining the standard lifting location*

The standard lifting location serves as the three-dimensional reference point for evaluating the worker's lifting posture. The standard lifting location for the 1981 equation was defined as a vertical height of 75 cm from the floor and a horizontal distance of 15 cm from the mid-point between the ankles. The 1991 equation continues to use a vertical height of 75 cm for the standard reference location, as supported by recent data (Ruhmann and Schmidtke 1989). However, the horizontal displacement factor was increased from 15 to 25 cm for the 1991 equation. This increase reflects recent findings that showed 25 cm as the minimum horizontal distance most often used by workers lifting loads that did not interfere with front of the body (Garg and Badger 1986, Garg 1986).

6.2. *Establishing the load constant*

The load constant (23 kg or 51 lbs) refers to the maximum recommended weight for lifting at the standard lifting location under optimal conditions (i.e. sagittal position, occasional lifting, good couplings, ≤ 25 cm vertical displacement, etc.). Selection of the load constant is based on the psychophysical and biomechanical criteria. The 1991 committee estimated that lifting a load equivalent to the load constant under ideal conditions (i.e., where all of the factors are equal to 1·0) would be acceptable to 75% of female workers and about 90% of male workers and that the disc compression force resulting from such a lift would be less than 3·4 kN.

For the revised equation, the load constant was reduced from 40 to 23 kg. This reduction was partly driven by the need to increase the 1981 minimum horizontal displacement from 15 to 25 cm for the 1991 equation, as noted above. The revised load constant is 17 kg less than that for 1981; but at the revised minimum horizontal displacement of 25 cm, the 23 kg load constant represents only a 1 kg reduction from the 1981 equation when adjusted for revised horizontal distance. This 1 kg reduction reflects recent data reported by Snook and Ciriello (1991) indicating that the maximum acceptable weight limit for female workers is lower than the capacity that was reported in 1978 (Snook 1978).

Although the 23 kg load constant was based on the maximum acceptable weight limit for 75% of female workers, the recommended weight limits are likely to be acceptable to at least 90% of female workers when the revised load constant is applied in the lifting equation. This conclusion is based on a comparison with the Snook and Ciriello (1991) study (table 5).

6.3. *Deriving mathematical expressions*

The multipliers for the revised lifting equation refer to the six coefficients (mathematical expressions) used to reduce the load constant to compensate for characteristics of the lifting task which are different from the standard or optimal conditions

(i.e., sagittal position, occasional lifting, good couplings, ≤ 25 cm vertical displacement, etc.). These conditions or factors were identified in one or more epidemiologic studies of manual lifting (Chaffin and Park 1973, Snook 1978, Frymoyer *et al.* 1983, Bigos *et al.* 1986). Each of the six multipliers should satisfy all three of the lifting criteria presented in table 1. In most cases, the multipliers represent the most conservative estimate of lifting capacity for each individual lifting factor.

The six multipliers (coefficients) were derived from a series of adjustments (iterations) in which the revised coefficients were used to generate predicted loads. These loads were then compared with empirically derived lifting values from the previously cited psychophysical lifting studies. The rationale for each of the six multipliers is briefly reviewed in the following subsections.

6.3.1. *Horizontal multiplier*: Biomechanical and psychophysical studies indicate that with increasing horizontal distance of the load from the spine, the predicted disc compression force increases and the maximum acceptable weight limit decreases (Snook 1978, Chaffin and Andersson 1984, Garg 1986). The axial compression stress applied to the spine during lifting is generally proportional to the horizontal distance of the load from the spine. For example, both the load and the flexion moment (the product of the load and the horizontal distance from the spinal axis) are important in determining the axial compression stresses on the lumbar spine (Schultz *et al.* 1982, Chaffin and Andersson 1984). Furthermore, psychophysical data consistently indicate that as the load is moved horizontally from the spine, the amount of weight a person is willing to lift decreases proportionately (Snook 1978, Ayoub *et al.* 1978, Garg and Badger 1986, Snook and Ciriello 1991).

To satisfy the lifting criteria, the horizontal multiplier (HM) was determined as follows:

$$HM = (25/H) \tag{1}$$

where H = the horizontal distance in centimetres

$$HM = (10/H) \tag{2}$$

where H = the horizontal distance in inches

6.3.2. *Vertical multiplier*: Biomechanical studies suggest an increased lumbar stress for lifting loads near the floor (Chaffin 1969, Bean *et al.* 1988). Epidemiologic studies indicate that lifting from near the floor is associated with a large percentage of low-back injuries attributable to lifting (Snook 1978, Punnett *et al.* 1991). Physiological studies indicate that lifting from near the floor requires a significantly greater energy expenditure than lifting from greater heights (Fredrick 1959, Garg *et al.* 1978). Although no direct empirical data exist to provide a specific adjustment value for lifting near the floor, the 1991 committee recommended that the vertical factor provide at least a 22·5% decrease in the allowable weight for lifts originating near the floor. The rationale for reduction of loads to be lifted above 75 cm from the floor is based on empirical data from psychophysical studies indicating that a worker's maximum-acceptable-weight-of-lift decreases as the vertical height of lift (V) increases above 75 cm (Snook 1978, Ayoub *et al.* 1978, Snook and Ciriello 1991). The 1991 committee chose a discount value of 22·5% to decrease the allowable weight for lifts at shoulder level (150 cm, or 60 in) and for lifts at floor level, resulting in the following vertical multiplier:

$$VM = (1 - 0{\cdot}003\,|\,V - 75\,|) \tag{3}$$

where V = vertical height in centimetres

$$VM = (1 - 0{\cdot}0075\,|\,V - 30\,|) \tag{4}$$

where V = vertical height in inches

6.3.3. *Distance multiplier*: The results of psychophysical studies suggest an approximate 15% decrease in maximum-acceptable-weight-of-lift when the total distance moved is near the maximum (e.g., lifts originating near the floor and ending above the shoulder (Garg *et al.* 1978, Snook 1978, Snook and Ciriello 1991). Also, results of physiological studies indicate a significant increase in physiological demand as the vertical distance of the lift increases (Aquilano 1968, Khalil *et al.* 1985). Finally, for lifts in which the total distance moved is < 25 cm (< 10 in), the physiological demand is not significantly increased, and therefore the multiplier should be held constant. As a result, the distance multiplier (DM) was established by the 1991 committee as follows:

$$DM = (0{\cdot}82 + (4{\cdot}5/D)) \tag{5}$$

where D = the total distance moved in centimetres

$$DM = (0{\cdot}82 + (1{\cdot}8/D)) \tag{6}$$

where D = the total distance moved in inches

6.3.4. *Asymmetric multiplier*: To date, only a few studies provide data on the relationship between asymmetric lifting (i.e., lifting loads away from the sagittal plane) to maximum acceptable lifting capacities. Of the limited number of psychophysical studies available, all have reported a decrease in maximum acceptable weight (8% to 22%) and a decrease in isometric lifting strength (39%) for asymmetric lifting tasks of 90 degrees compared with symmetric lifting tasks (Garg and Badger 1986, Mital and Fard 1986, Garg and Banaag 1988). The results from biomechanical studies also support a significant decrease in the allowable weight for asymmetric lifting jobs (Bean *et al.* 1988).

Therefore, the 1991 committee recommended that the asymmetric multiplier be established so that the allowable weight of lift be reduced by about 30% for lifts involving asymmetric twists of 90 degrees. The asymmetric multiplier (AM) was established by the 1991 committee as follows:

$$AM = (1 - (0{\cdot}0032A)) \tag{7}$$

where A = the angle between the sagittal plane and the plane of asymmetry. (The asymmetry plane is defined as the vertical plane that intersects the midpoint between the ankles and the midpoint between the knuckles at the asymmetric location.)

6.3.5. *Coupling multiplier*: Loads equipped with appropriate couplings or handles facilitate lifting and reduce the possibility of dropping the load. Psychophysical studies that investigated the effects of handles on maximum-acceptable-weight-of-lift suggested that lifting capacity was decreased in lifting tasks involving containers without good handles (Garg and Saxena 1980, Smith and Jiang 1984, Drury *et al.* 1989). Although these studies did not agree precisely on the degree of reduction in lifting

Table 6. Coupling multiplier.

Couplings	$V < 75$ cm (30 in)	$V \geq 75$ cm (30 in)
	Coupling multipliers	
Good	1·00	1·00
Fair	0·95	1·00
Poor	0·90	0·90

capacity, most concluded that the reduction should be in the range of about 7% to 11% for containers without handles. The coupling multipliers are displayed in table 6.

Considering the quality of the data and the difficulty in judging the quality of the coupling, the consensus of the 1991 committee was that the penalty for a poor coupling should not exceed 10%. Hence, the container coupling multiplier (CM) was defined as follows:

$$CM = 1{\cdot}0,\ 0{\cdot}95,\ \text{or}\ 0{\cdot}90 \tag{8}$$

depending on the vertical height of the lift and the quality of the couplings. Coupling quality was categorized as good, fair, or poor. Height was categorized as ≤ 75 cm (30 in) or > 75 cm.

6.3.6. *Frequency multiplier*: For the 1991 lifting equation, the appropriate frequency multiplier is obtained from a table (table 7) rather than from a mathematical

Table 7. Frequency multiplier (FM).

Frequency lifts/min	Work duration ≤ 1 h		≤ 2 h		≤ 8 h	
	$V < 75$	$V \geq 75$	$V < 75$	$V \geq 75$	$V < 75$	$V \geq 75$
0·2	1·00	1·00	0·95	0·95	0·85	0·85
0·5	0·97	0·97	0·92	0·92	0·81	0·81
1	0·94	0·94	0·88	0·88	0·75	0·75
2	0·91	0·91	0·84	0·84	0·65	0·65
3	0·88	0·88	0·79	0·79	0·55	0·55
4	0·84	0·84	0·72	0·72	0·45	0·45
5	0·80	0·80	0·60	0·60	0·35	0·35
6	0·75	0·75	0·50	0·50	0·27	0·27
7	0·70	0·70	0·42	0·42	0·22	0·22
8	0·60	0·60	0·35	0·35	0·18	0·18
9	0·52	0·52	0·30	0·30	0·00	0·15
10	0·45	0·45	0·26	0·26	0·00	0·13
11	0·41	0·41	0·00	0·23	0·00	0·00
12	0·37	0·37	0·00	0·21	0·00	0·00
13	0·00	0·34	0·00	0·00	0·00	0·00
14	0·00	0·31	0·00	0·00	0·00	0·00
15	0·00	0·28	0·00	0·00	0·00	0·00
>15	0·00	0·00	0·00	0·00	0·00	0·00

Note:
‡ values of V are in cm; 75 cm = 30 in.

expression and table, as was the case in the 1981 lifting equation (i.e., in 1981, the $FM = 1 - [F/F_{max}]$, where FM = the frequency multiplier, F = task frequency rate, and F_{max} = maximum frequency as obtained from a table).

The frequency multipliers in table 7 are based on two sets of data. For lifting *frequencies up to 4 lifts/min*, psychophysical data from Snook and Ciriello (1991) were used to develop the frequency multiplier (FM) values.[5] These FM values are shown in the upper portion of table 7 (all cells in the first six rows).

For lifting *frequencies above 4 lifts/min*, the frequency multipliers values, which are displayed in table 7, row 5 and below, were determined from a three-step process using the energy expenditure prediction equations developed by Garg (1976) (Garg *et al.* 1978) (see Appendix, Part D).

The first step used Garg's empirically-derived linear regression equations to predict the energy demands of lifting tasks for *frequencies above 4 lifts/min*. The equations include terms for gender, weight of load, frequency of lifts, and the worker's body weight. Two equations were used, one for lifts below the waist and one for lifts above the waist, namely: a stoop-lift equation and an arm-lift equation (Rodgers *et al.* 1991: 34–35). Assuming a body weight of 130 lbs for a woman, Garg in an iterative approach determined the combinations of frequencies of lifts and weights of loads that would yield energy expenditure values equivalent to those in table 3. For all calculations, the most energy efficient lifting posture was assumed since workers tend to use the most efficient method.

In the second step, frequency multipliers were then generated from these intermediate load weights that would provide Recommended Weight Limits equivalent to the load weights determined from the first step.

For the third step, the committee reviewed and adjusted the frequency multipliers in table 7 to ensure that: (1) the frequency multipliers for lifts below 30 inches would not exceed those for lifts of 30 inches or above; and (2) that the transition zone between the psychophysical- and physiological-derived frequency multipliers (i.e., 4 lifts/min) provided continuous values. In general, the frequency multiplier values in table 7 meet the energy criteria provided in table 3 with a few exceptions. The results of the analysis are provided in greater detail in Rodgers (1991: 35–37).

The committee did note in their analysis, however, that the energy expenditure for repetitive squat lifts may exceed the energy expenditure limits listed in table 3, row 1. This finding is also consistent with different studies showing that the energy demands for squat postures are greater than for stoop postures (Frederik 1959, Garg and Herrin 1979, Kumar 1984).

The committee concluded that the frequency multipliers provide a close approximation of observed and predicted effects of lifting frequency on acceptable workloads for lifting (Rodgers *et al.* 1991: 37).

From the NIOSH perspective, it is possible that obese workers may exceed the energy expenditure criteria for lifts from below the waist. In addition, there are some circumstances in which local muscle fatigue may occur even though whole body fatigue has not occurred. This is most likely in situations involving lifting at high rates for longer than 15 min, or prolonged use of awkward postures, such as constant bending.

[5] Snook and Ciriello's (1991) data provide recommended weight limits for repetitive manual lifting tasks performed under a wide variety of conditions (different heights, locations, and frequencies).

7. Identifying hazardous lifting jobs with the lifting index

A key concept of the 1981 lifting equation is that the risk of lifting-related low back pain increases as the demands of the lifting task increase (Chaffin and Park 1973, Snook 1978, Herrin *et al.* 1986). Based on this concept, the 1981 lifting equation was used to define two points: the action limit and the maximum permissible limit (which is three times the action limit). For job assessment purposes, lifting jobs that required workers to lift loads below the action limit were considered to pose little risk of lifting-related low back pain for most workers. Lifting jobs that required workers to lift loads between the action limit and the maximum permissible limit likely pose increased risk for some workers but not for others. And lifting jobs that required workers to lift loads above the maximum permissible limit were considered to pose a significant risk of lifting-related low back pain for many workers.

The 1991 equation is also based on the concept that the risk of lifting-related low back pain increases as the demands of the lifting task increase. Rather than using a three-stage decision matrix, however, as was used with the 1981 equation, a single lifting index (LI) was proposed for the 1991 equation. Specifically, the LI is the ratio of the load lifted to the recommended weight limit. The lifting index (LI) is similar in concept to Ayoub's job severity index (JSI) and Chaffin's lifting strength rating (LSR) (Ayoub *et al.* 1978 and Chaffin 1974). Each of these indices encompass the notion that the risk of injury increases as the load or job demands exceeds some baseline capacity of the worker. This capacity may be estimated from a lifting equation, or from estimates of worker's strength, as assessed by various psychophysical tests and regression models.

The lifting index (LI) provides a simple method for comparing the lifting demands associated with different lifting tasks in which the load weights vary and the recommended weight limits (RWL) vary. In theory, the magnitude of the LI may be used as a gauge to estimate the percentage of the workforce that is likely to be at risk for developing lifting-related low back pain. The shape of the risk function, however, is not known. Thus it is not possible to quantify the precise degree of risk associated with increments in the lifting index. In a similar manner, there is uncertainty about whether a lifting index of one is a reliable boundary for differentiating between an increase in risk and no increase in risk for some fraction of the working population. The previous discussion of the criteria underlying the lifting equation and of the equation multipliers highlight the assumptions and uncertainties in the scientific studies and the theoretical models which have related lifting to low back injuries. However, these uncertainties do not all point in the same direction. Some support the belief that a lifting index of one will place a substantial fraction of the work force at an increased risk of low back pain. Others support the belief that most of the work force can work safely above a lifting index of one.

Three of the most important limitations of the equation are the following:

(1) A significant part of the equation is based on psychophysical laboratory studies. Since these data are obtained from workers' judgment of perceived lifting stress, psychophysical data may reveal more about a worker's tolerance to stress than of impending low back pain.
(2) The physiological criterion is based on restricting energy expenditures to avoid whole body fatigue. The criterion, however, does not address the potential risk associated with the cumulative effects of repetitive lifting, which may be independent of the level of whole body fatigue.

(3) If the three criteria for the equation were considered individually, they would probably not be protective of all workers.

A main tenet of our approach, however, is that the multiplicative nature of the equation has provided a final equation that is more likely to protect healthy workers than each individual criterion. Specifically, when several factors deviate from the ideal (i.e., standard lift location), the decline in the predicted value obtained from a multiplicative model for most lifts depends on the product of several factors; this substantially reduces the RWL. Based on individual parameters, the multiplicative model defines discrete regions where no lifting is allowed no matter how ideal the other parameters are. For example, if the horizontal factor exceeds 25 inches, the multiplier is zero, resulting in a computed RWL value of zero. This means that no weight should be lifted for this task condition.

Despite the limitations of the research studies and inherent uncertainties in relying on expert judgment, it is likely that lifting tasks with a lifting index > 1 pose an increased risk for lifting-related low back pain for some fraction of the workforce. Therefore, the lifting index may be used to identify potentially hazardous lifting jobs or to compare the relative severity of two jobs for the purpose of evaluating and redesigning them.

Some members of the 1991 committee believe that worker selection criteria based on research studies, empirical observations, or theoretical considerations such as job-related strength testing or aerobic capacity testing can accurately identify workers who can perform lifting tasks with a lifting index > 1 without an increased risk of a work-related injury (Chaffin and Andersson 1984, Ayoub and Mital 1989). These members agree, however, that many workers will be at elevated risk if the lifting index exceeds 3·0. Additionally, some members of the 1991 committee believe that the 'informal' selection of workers which occurs in many jobs that require repetitive lifting tasks lead to a workforce that can work above a lifting index of 1·0 without substantial risk of low back injuries above the baseline rate of injury.

8. Limitations of the 1991 lifting equation

8.1. *General limitations*

The lifting equation is a specialized risk assessment tool. As with any specialized tool, its application is limited to those conditions for which it was designed. Specifically, the lifting equation was designed to meet select lifting-related criteria that encompasses biomechanical, work physiology, and psychophysical assumptions and data, identified above. To the extent that a given lifting task accurately reflects these underlying conditions and criteria, this lifting equation may be appropriately applied. The following list identifies a set of work conditions in which the application of the lifting equation would either under-or-over estimate the risk of low back pain or injury. Each of the following task limitations also highlight research topics in need of further research to extend the application of the lifting equation to a greater range of real world lifting tasks.

1. The 1991 lifting equation assumes that manual handling activities other than lifting are minimal and do not require significant energy expenditure, especially when repetitive lifting tasks are performed. Examples of non-lifting tasks include holding, pushing, pulling, carrying, walking, and climbing. If such non-lifting activities are common, measures of workers' energy expenditures and heart rate may be required to assess the metabolic demands of the different tasks.

2. The 1991 lifting equation does not include task factors to account for unpredicted conditions, such as unexpectedly heavy loads, slips, or falls. Additional biomechanical analyses may be required to assess the physical stress on joints that occur from traumatic incidents. Moreover, if the environment is unfavourable (e.g., temperature or humidity significantly outside the range of 19° to 26°C [66° to 79°F] or 35% to 50%, respectively) independent metabolic assessments would be needed to gauge the effects of these variables on heart rate and energy consumption.

3. The 1991 lifting equation was not designed to assess tasks involving one-handed lifting, lifting while seated or kneeling, lifting in a constrained work space, lifting people, lifting of extremely hot, cold, or contaminated objects, lifting of wheel barrels, shoveling, or high-speed lifting (i.e., lifting that is not performed within a 2–4 s time frame). For such task conditions, independent and task specific biomechanical, metabolic, and psychophysical assessments are needed.

4. The 1991 lifting equation assumes that the worker/floor surface coupling provides at least a 0·4 (preferably 0·5) coefficient of static friction between the shoe sole and the working surface. An adequate worker/floor surface coupling is necessary when lifting to provide a firm footing and to control accidents and injuries resulting from foot slippage. A 0·4 to 0·5 coefficient of static friction is comparable to the friction found between a smooth, dry floor and the sole of a clean, dry leather work shoe (nonslip type). Independent biomechanical modelling may be used to account for variations in the coefficient of friction.

5. The 1991 lifting equation assumes that lifting and lowering tasks have the same level of risk for low back injuries (i.e., that lifting a box from the floor to a table is equally as hazardous as lowering the same box from a table to the floor). This assumption may not be true if the worker actually drops or guides the box to the floor rather than lowers all the way to the floor. Independent psychophysical assessments need to be undertaken to assess worker capacity for various lowering conditions.

In conclusions, the lifting equation is only one tool in a comprehensive effort to prevent work-related low back pain and disability. Lifting is only one of the causes of work-related low back pain and disability. There are many other causes which have been hypothesized or established as factors including whole body vibration, static postures, prolonged sitting, and direct trauma to the back. Psychosocial factors, appropriate medical treatment, and job demands also may be particularly important in influencing the transition of acute low back pain to chronic disabling pain.

8.2. *The need for validation*

All methods need validation. For the 1991 lifting equation, validation will require an extensive collaborative effort. Appropriate studies must be designed and conducted to determine whether the methods presented here effectively reduce the morbidity associated with manual materials handling, particularly two-handed lifting tasks.

9. Summary and conclusions

The 1991 revised lifting equation was prepared as a methodological tool for safety and health practitioners who must evaluate the lifting demands of a wider range of manual handling jobs than contained in the 1981 *Work Practices Guide for Manual Lifting* (NIOSH 1981). The equation was designed to assist in the identification of ergonomic solutions for reducing the physical stresses associated with manual lifting by identifying the features of the lifting task that contribute the most to the hazard for low back injuries.

Three criteria (biomechanical, physiological, and psychophysical) were used to define the limiting components for the revised lifting equation. This approach was adopted because we found that a single criterion would likely fail to protect healthy workers from back injury for many common types of lifting tasks. In general, the 1991 committee believed that the combination of using a multiplicative model and the practice of using the most conservative criterion or data values when faced with uncertainty served to provide a final lifting equation which is more likely to protect healthy workers for a wider variety of lifting tasks than methods which rely on only a single task factor (e.g., weight) or single criterion (e.g., intradiscal pressure).

NIOSH believes that the revised 1991 lifting equation is more likely than the 1981 equation to protect most workers. There are two main reasons for this: (1) the 1991 equation is applicable to a wider variety of lifting jobs than the 1981 equation because of the addition of the asymmetric and coupling multipliers, ultimately affecting more lifting jobs and workers; and (2) the recommended weight limits computed using the 1991 equation are generally lower than the maximum acceptable weight limits reported by Snook and Ciriello (1991). Because of the uncertainties in both the existing scientific studies and theoretical models, further research is needed to assess the magnitude of risk for lifting-related LBP and its association with the lifting index.

Acknowledgements

The authors gratefully acknowledge the technical assistance of the 1991 committee members in developing the revised equation: M. M. Ayoub, Ph.D.; Donald Chaffin, Ph.D.; Colin Drury, Ph. D.; Arun Garg, Ph.D.; and Suzanne Rodgers, Ph.D. We also wish to thank Gunnar Andersson, M.D., Ph.D., Jerome Congleton, Ph.D., Stephan Konz, Ph.D., David Olson, Ph.D., Stephen Simon, Ph.D., and Stover Snook, Ph.D., for their valuable contributions in the review of the manuscript. Special thanks to Anne C. Hamilton, Division of Standards Development and Technology Transfer, for her careful editorial review. Finally, special appreciation is extended to Janet C. Haartz, Ph.D., Director, Division of Biomedical and Behavioral Science, for her leadership, support, and technical guidance.

References

AQUILANO, N. J. 1968, A physiological evaluation of time standards for strenuous work as set by stopwatch time study and two predetermined motion time data systems, *Journal of Industrial Engineering*, **19**, 425–432.

ANDERSON, C. K. 1983, A biomechanical model of the lumbosacral joint for lifting activities, Ph.D. Dissertation, The University of Michigan, Ann Arbor, Michigan.

ANDERSON, C. K., CHAFFIN, D. B., HERRIN, G. D. and MATHEWS, L. S. 1985, A biomechanical model of the lumbosacral joint during lifting activity, *Journal of Biomechanics*, **18**, 571–584.

ASFOUR, S. S., AYOUB, M. M. and GENAIDY, A. M. 1985, Computer models for energy cost prediction of manual lifting and lowering, *Computers and Industrial Engineering*, **9**, 376–379.

ASFOUR, S. S., GENAIDY, A. M. and MITAL, A. 1988, Physiological guidelines for the design of manual lifting and lowering: the state of the art, *American Industrial Hygiene Association Journal*, **49**, 150–160.

ASTRAND, P. O. and RODAHL, K. 1986, *Textbook of Work Physiology*, 3rd edn (McGraw-Hill Inc., New York).

AYOUB, M. M. BETHEA, N. J., DEIVANAYAGAM, S., ASFOUR, S. S., BAKKEN, G. M. and LILES, D. 1978, Determination and modelling of lifting capacity, Final Report, DHHS (NIOSH) Grant No. 5-R01-0H-00545-02.

AYOUB, M. M., LILES, D., ASFOUR, S. S., BAKKEN, G. M., MITAL A. and SELAN, J. L. 1982, Effects of task variables on lifting capacity, Final Report, HEW (NIOSH) Grant No. 5R010H00798-04.

AYOUB, M. M., SELAN, J. L. and JIANG, B. C. 1986, Manual materials handling, in G. Salvendy (ed.), *Handbook of Human Factors* (John Wiley & Sons, New York), 791–818.

AYOUB, M. M. and MITAL, A. 1989, *Manual Materials Handling* (Taylor & Francis, London).

BEAN, J. C., CHAFFIN, D. B. and SCHULTZ, A. B. 1988, Biomechanical model calculation of muscle contraction forces: a double linear programming method, *Journal of Biomechanics*, **21**, 59–66.

BIGOS, S., SPENGLER, D. M., MARTIN, N. A., ZEH, J., FISHER, L. and NACHEMSON, A. 1986, Back injuries in industry: a retrospective study, III. Employee-related factors, *Spine*, **11**, 252–256.

BINK, B. 1962, The physical working capacity in relation to working time and age, *Ergonomics*, **5**, 25–28.

BRINCKMANN, P. BIGGEMANN, M. and HILWEG, D. 1988, Fatigue fracture of human lumbar vertebrae, *Clinical Biomechanics*, Supplement No. 1.

BRINGHAM, C. J. and GARG, A. 1983, The role of biomechanical job evaluation in the reduction of overexertion injuries: a case study, paper at the 23rd Annual American Industrial Hygiene Association Conference, Philadelphia, PA.

BROWN, J. R. 1972, *Manual Lifting and Related Fields: An Annotated Bibliography* (Labor Safety Council of Ontario, Ontario, Canada).

BROWN, J. R. 1973, Lifting as an industrial hazard, *American Industrial Hygiene Association Journal*, **34**, 292–297.

BUSH-JOSEPH, C., SCHIPPLEIN, O., ANDERSSON, G. B. J. and ANDRIACCHI, T. P. 1988, Influence of dynamic factors on the lumbar spine moment in lifting, *Ergonomics*, **31**, 211–216.

CHAFFIN, D. B. 1969, A computerized biomechanical model: development of and use in studying gross body actions, *Journal of Biomechanics*, **2**, 429–441.

CHAFFIN, D. B. 1974, Human strength capability and low back pain, *Journal of Occupational Medicine*, **16**, 248–254.

CHAFFIN, D. B. 1975a, Manual material handling and low back pain, in C. Zend (ed.), *Occupational Medicine: Principles and Practical Applications* (Chicago, Year Book Medical Publishers).

CHAFFIN, D. B. 1975b, Ergonomics guide for the assessment of human static strength, *American Industrial Hygiene Association Journal*, **36**, 505–511.

CHAFFIN, D. B. and ANDERSSON, G. B. J. 1984, *Occupational Biomechanics* (John Wiley & Sons, New York).

CHAFFIN, D. B. and MOULIS, E. J. 1969, An empirical investigation of low back strains and vertebrae geometry, *Journal of Biomechanics*, **2**, 89–96.

CHAFFIN, D. B. and PARK, K. S. 1973, A longitudinal study of low-back pain as associated with occupational weight lifting factors, *American Industrial Hygiene Association Journal*, **34**, 513–525.

CHAFFIN, D. B., HERRIN, G. D. and KEYSERLING, W. M. 1976, Pre-employment strength testing in selecting workers for materials handling jobs, US Department of Health and Human Services, National Institute for Occupational Safety and Health, CDC report number 99-74-62, Cincinnati, OH.

CIRIELLO, V. M. and SNOOK, S. H. 1983, A study of size, distance, height and frequency effects on manual handling tasks, *Human Factors*, **25**, 473–483.

CIRIELLO, V. M., SNOOK, S. H., BLICK, A. C. and WILKINSON, P. L. 1990, The effects of task duration on psychophysically-determined maximum acceptable weights and forces, *Ergonomics*, **33**, 187–200.

COLEMAN, A. E. and BURFORD, C. L. 1971, Aerobic capacity in sedentary adults participating in an adult fitness program, *American Corrective Therapy Journal*, **25**, 48–51.

DEHLIN, O., HEDENRUD, B. and HORAL, J. 1976, Back symptoms in nursing aides in a geriatric hospital, *Scandinavian Journal of Rehabilitation Medicine*, **8**, 47–53.

DRURY, C. G., DEEB, J. M., HARTMAN, B., WOOLEY, S., DRURY, C. E. and GALLAGHER, S. 1989, Symmetric and asymmetric manual materials handling. Part 1. Physiology and psychophysics, *Ergonomics*, **32**, 467–489.

EASTMAN KODAK COMPANY, ERGONOMICS GROUP, 1986, *Ergonomic Design for People at Work*, Vol. 2 (Van Nostrand Reinhold, New York).

FERNANDEZ, J. E. and AYOUB, M. M. 1987, Maximum acceptable weight lifted over extended periods, *Trends in Ergonomics/Human Factors IV* (North Holland, Amsterdam).

FREDERIK, W. S. 1959, Human energy in manual lifting, *Modern Materials Handling*, **14**, 74–76.

FREIVALDS, A., CHAFIN, D. B., GARG, A. and LEE, K. S. 1984, A dynamic biomechanical evaluation of lifting maximum acceptable loads, *Journal of Biomechanics*, **17**, 251–262.

FRYMOYER, J. W., POPE, M. H., COSTANZA, M. C., ROSEN, J. C., GOGGIN, J. E. and WILDER, D. G. 1980, Epidemiologic studies of low back pain, *Spine*, **5**, 419–423.

FRYMOYER, J. W., POPE, M. H., CLEMENTS, J. H., WILDER, D. G., MCPHERSON, B. and ASHIKAGA, T. 1983, Risk factors in low-back pain, *The Journal of Bone and Joint Surgery*, **65A**, 213–218.

GARG, A. 1976, A metabolic rate prediction model for manual materials handling jobs, Ph.D Dissertation, University of Michigan.

GARG, A. and HERRIN, G. D. 1979, Stoop or squat? A biomechanical and metabolic evaluation, *Transactions of American Institute of Industrial Engineers*, **11**, 293–302.

GARG, A. 1983, Physiological responses to one-handed lift in the horizontal plane by female workers, *American Industrial Hygiene Association Journal*, **44**, 190–200.

GARG, A. 1986, A review of physiological evaluation of time standards for strenuous work, *Trends in Ergonomics/Human Factors III* (North Holland, Amsterdam), 545–553.

GARG, A. 1989, An evaluation of the NIOSH guidelines for manual lifting with special reference to horizontal distance, *American Industrial Hygiene Association Journal*, **50**, 157–164.

GARG, A., CHAFFIN, D. B. and HERRIN, G. D. 1978, Prediction of metabolic rates for manual materials handling jobs, *American Industrial Hygiene Association Journal*, **39**, 661–674.

GARG, A. CHAFFIN, D. B. and FREIVALDS, A. 1982, Biomechanical stresses from manual load lifting: a static vs dynamic evaluation, *Transactioins of the American Institute of Industrial Engineers*, **14**, 272–281.

GARG, A. and BANAAG, J. 1988, Maximum acceptable weights, heart rates and rpe's for one hour's repetitive asymmetric lifting, *Ergonomics*, **31**, 77–96.

GARG, A. and BADGER, D. 1986, Maximum acceptable weights and maximum voluntary strength for asymmetric lifting, *Ergonomics*, **29**, 879–892.

GARG, A. and SAXENA, U. 1979, Effects of lifting frequency and techniques on physical fatigue with special reference to psychophysical methodology and metabolic rate, *American Industrial Hugiene Association Journal*, **40**, 894–903.

GARG, A. and SAXENA, U. 1980, Container characteristics and maximum acceptable weight of lift, *Human Factors*, **22**, 487–495.

GRACOVETSKY, S. and FARFAN, H. 1986, The optimum spine, *Spine*, **11**, 543–573.

HANSSON, T. and ROOS, B. 1981, The relation between bone mineral content, experimental compression fractures, and disc degeneration in lumbar vertebrae, *Spine*, **6**, 147–153.

HERRIN, G. D., JARIEDI, M. and ANDERSON, C. K. 1986, Prediction of overexertion injuries using biomechanical and psychophysical models, *American Industrial Hygiene Association Journal*, **47**, 322–330.

JAGER, M. and LUTTMAN, A. 1989, Biomechanical analysis and assessment of lumbar stress during load lifting using a dynamic 19-segment human model, *Ergonomics*, **32**, 93–112.

JENSEN, R. C. 1988, Epidemiology of work-related back pain, *Topics in Acute Care and Trauma Rehabilitation*, **2**, 1–15,

JORGENSEN, K. 1985, Permissible loads based on energy expenditure measurements, *Ergonomics*, **28**, 365–369.

KARWOWSKI, W. and AYOUB, M. M. 1984, Effect of frequency on the maximum acceptable weight of lift, in A. Mital (ed.), *Trends in Ergonomics/Human Factors I* (Elsevier Science Publishers, North-Holland), 167–172.

KARWOWSKI, W. and YATES, J. W. 1986, Reliability of the psychophysical approach to manual lifting of liquids by females, *Ergonomics*, **29**, 237–248.

KHALIL, T. M., GENAIDY, A. M., ASFOUR, S. S. and VINCIGUERRA, T. 1985, Physiological limits of lifting, *American Industrial Hygiene Association Journal*, **46**, 220–224.

KRUSEN, F., ELLWOOD, C. M. and KOTTLE, F. J. 1965, *Handbook of Physical Medicine and Rehabilitation* (W. B. Saunders, Philadelphia).

KUMAR, S. 1984, The physiological cost of three different methods of lifting in sagittal and lateral planes, *Ergonomics*, **27**, 425–433.

LAWRENCE, J. S. 1955, Rheumatism in coal miners, Part II, *British Journal of Industrial Medicine*, **12**, 249–261.

LEGG, S. J. and PATEMAN, C. M. 1984, A physiological study of the repetitive lifting capabilities of healthy young males, *Ergonomics*, **27**, 259–272.

LEHMANN, G. 1958, Physiological measurements as a basis of work organization in industry, *Ergonomics*, **1**, 328–344.

LESKINEN, T. P. J., STALHAMMER, H. R., KUORINKA, I. A. A. and TROUP, J. D. G. 1983, The effect of inertial factors on spinal stress when lifting, *Engineering in Medicine*, **12**, 87–89.

LILES, D. H. and MAHAJAN, P. 1985, Using NIOSH lifting guide decreases risks of back injuries, *Occupational Health & Safety*, 57–60.

MAGORA, A. 1970, Investigation of the relation between low back pain and occupation, *Industrial Medicine*, **39**, 465–471.

MAGORA, A. 1974, Investigation of the relation between low back pain and occupation, *Scandinavian Journal of Rehabilitation Medicine*, **6**, 81–88.

MARRAS, W. and SOMMERICH, C. 1991a, A three dimensional motion model of loads on the lumbar spine, I: model structure, *Human Factors*, **33**, 123–137.

MARRAS, W. and SOMMERICH, C. 1991b, A three dimensional motion model of loads on the lumbar spine, II: model validation, *Human Factors*, **33**, 139–149.

MCGILL, S. M. and NORMAN,. R. W. 1985, Dynamically and statistically determined low back movements during lifting, *Journal of Biomechanics*, **18**, 877–885.

MCGILL, S. M. and NORMAN, R. W. 1986, Partitioning of the 14–15 dynamic moment into disc, ligamentous, and muscular components during lifting, *Spine*, **11**, 666–678.

MITAL, A. 1983, The psychophysical approach in manual lifting: a verification study, *Human Factors*, **25**, 485–491.

MITAL, A. 1984a, Comprehensive maximum acceptable weight of lift database for regular 8-hour workshifts, *Ergonomics*, **27**, 1127–1138.

MITAL, A. 1984b, Maximum weights of lift acceptable to male and female industrial workers for extended workshifts, *Ergonomics*, **27**, 1115–1126.

MITAL, A. and FARD, H. F. 1986, Psychophysical and physiological responses to lifting symmetrical and asymmetrical loads symmetrically and asymmetrically, *Ergonomics*, **29**, 1263–1272.

MORRIS, J. M., LUCAS, D. B. and BRESLER, M. S. 1961, Role of trunk in stability of the spine, *Journal of Bone and Joint Surgery*, **43A**, 327–351.

NATIONAL SAFETY COUNCIL 1990, *Accident Facts* (NSC, Chicago).

NIOSH 1981, *Work Practices Guide for Manual Lifting*, NIOSH Technical Report No. 81-122, US Department of Health and Human Services, National Institute for Occupational Safety and Health, Cincinnati, OH.

NATIONAL TECHNICAL INFORMATION SERVICE 1991, *Scientific Support Documentation for the Revised 1991 NIOSH Lifting Equation*, PB91-226274 (US Department of Commerce, Springfield, VA).

PETROFSKY, J. S. and LIND, A. R. 1978a, Metabolic, cardiovascular, and respiratory factors in the development of fatigue in lifting tasks, *Journal of Applied Physiology*, **45**, 64–68.

PETROFSKY, J. S. and LIND, A. R. 1978b, Comparison of metabolic and ventilatory responses of men to various lifting tasks and bicycle ergometry, *Journal of Applied Physiology*, **45**, 60–63.

POPE, M. H., ANDERSSON, G. B. J., FRYMOYER, J. W. and CHAFFIN, D. B. 1992, *Occupational Low Back Pain: Assessment, Treatment, and Prevention* (Mosby Year Book, St Louis, MO).

PUNNETT, L., FINE, L. J., KEYSERLING, W. M., HERRIN, G. D. and CHAFFIN, D. B. 1991, Back disorders and nonneutral trunk postures of automobile workers, *Scandinavian Journal of Work and Environmental Health*, **17**, 337–346.

PUTZ-ANDERSON, V. and WATERS, T. 1991, Revisions in NIOSH Guide to Manual Lifting, paper presented at national conference entitled 'A National Strategy for Occupational Musculoskeletal Injury Prevention—Implementation Issues and Research Needs', University of Michigan.

RADIN, E. L., PARKER, H. G. and PUGH, J. W. 1973, Response of joints to impact loading—III, *Journal of Biomechanics*, **6**, 51–57.

RODGERS, S. H. 1978, Metabolic indices in materials handling tasks, in C. G. Drury (ed.), *Safety in Manual Materials Handling* DHEW (NIOSH) Publication No. 78–185.

RODGERS, S. H., YATES, J. W. and GARG, A. 1991, The physiological basis for manual lifting guidelines, National Technical Information Service, Report number 91-227-330.

RUHMANN, H. and SCHMIDTKE, H. 1989, Human strength: measurements of maximum isometric forces in industry, *Ergonomics*, **32**, 865–879.

SCHULTZ, A. B., ANDERSSON, G. B. J., HADERSPECK, K., ORTENGREN, R., NORDIN, M. and BJORK, R. 1982a, Analysis and measurement of lumbar trunk loads in tasks involving bends and twists, *Journal of Biomechanics*, **15**, 669–675.

SCHULTZ, A. B., ANDERSSON, G., ORTENGREN, R., HADERSPECK, K. and NACHEMSON, A. 1982b, Loads on the lumbar spine, *Journal of Bone and Joint Surgery*, **64A**, 713–720.

SCHULTZ, A., CROMWELL, R., WARWICK, D. and ANDERSSON, G. 1987, Lumbar trunk muscle use in standing isometric heavy exertions, *Journal of Orthopaedic Research*, **5**, 320–329.

SHARP, M. A., HARMAN, E., VOGEL, J. A., KNAPIK, J. J. and LEGG, S. J. 1988, Maximal aerobic capacity for repetitive lifting: comparison with three standard exercise modes, *European Journal of Applied Physiology*, **57**, 753–760.

SMITH, J. L. and JIANG, B. C. 1984, A manual materials handling study of bag lifting, *American Industrial Hygiene Association Journal*, **45**, 505–508.

SNOOK, S. H. 1978, The design of manual handling tasks, *Ergonomics*, **21**, 963–985.

SNOOK, S. H. and CIRIELLO, V. M. 1991, The design of manual handling tasks: revised tables of maximum acceptable weights and forces, *Ergonomics*, **34**, 1197–1213.

TICHAUER, E. R. 1971, A pilot study of the biomechanics of lifting in simulated industrial work situations, *Journal of Safety Research*, **3**, 98–115.

WILLIAMS, C. A., PETROFSKY, J. S. and LIND, A. R. 1982, Physiological responses of women during lifting exercise, *European Journal of Applied Physiology*, **50**, 133–144.

Received 2 September 1992.
Revision accepted 4 November 1992.

Appendices

A. Calculation for recommended weight limit

$$\text{RWL} = LC \times HM \times VM \times DM \times AM \times FM \times CM$$

Recommended weight limit

Component		*Metric*	*US customary*
LC = load constant	=	23 kg	51 lbs
HM = horizontal multiplier	=	$(25/H)$	$(10/H)$
VM = vertical multiplier	=	$(1-(0{\cdot}003\lvert V-75\rvert))$	$(1-(0{\cdot}0075\lvert V-30\rvert))$
DM = distance multiplier	=	$(0{\cdot}82+(4{\cdot}5/D))$	$(0{\cdot}82+(1{\cdot}8/D)$
AM = asymmetric multiplier	=	$(1-(0{\cdot}0032A))$	$(1-(0{\cdot}0032A))$

FM = frequency multiplier (from table 7)
CM = coupling multiplier (from table 6)

where:

H = horizontal distance of hands from midpoint between the ankles. Measure at the origin and the destination of the lift (cm or in).

V = vertical distance of the hands from the floor. Measure at the origin and destination of the lift (cm or in).

D = vertical travel distance between the origin and the destination of the lift (cm or in).

A = angle of asymmetry—angular displacement of the load from the sagittal plane. Measure at the origin and destination of the lift (degrees).

F = average frequency rate of lifting measured in lifts/min. Duration is defined to be: ≤ 1 h; ≤ 2 h; or ≤ 8 h assuming appropriate recovery allowances (see table 7).

B. Calculation for energy expenditure limit

1. For lifts above 75 cm (30 in), multiply the baseline aerobic work capacity (9·5 kcal/min)[6] by 0·7.
2. For lifting duration up to 1 h, multiply the value obtained in step 1 above by 0·5; for duration up to 2 h, multiply by 0·4; and, for duration between 2 and 8 h, multiply by 0·33.

For example, the energy expenditure limit for 8 h of lifting above the waist (75 cm) would be 9·5 × 0·7 × 0·33 or 2·2 kcal/min, as shown in table 3.

C. Comparison of criterion-based load weights

Task descriptions

Task 1 [floor–knuckle]	$H = 42$ cm, $V = 0$ cm, $D = 76$ cm, $F = 1/30$ min
Task 2 [knuckle–shoulder]	$H = 37$ cm, $V = 66$ cm, $D = 76$ cm, $F = 1/30$ min
Task 3 [shoulder–reach]	$H = 37$ cm, $V = 127$ cm, $D = 76$ cm, $F = 4$/min
Task 4 [floor–shoulder]	$H = 42$ cm, $V = 0$ cm, $D = 152$ cm, $F = 4$/min

Common factors

- 25th percentile female with a height of 160 cm and weight of 57 kg (Eastman Kodak 1986);
- semi-squat or stoop lifting posture;
- box size of 40 × 34 × 14 cm [LWH];
- good couplings;
- sagittal plane lifts only (no asymmetry);
- lifting duration of 4 h.

To simplify the analyses, the following assumptions were made to correspond to the Snook and Ciriello (1991) data:

- vertical displacement (D) was assumed to be 76 cm (30 inches);
- box width (W) of 34 cm was chosen to correspond to Snooks' box width of 34 cm;
- lifting duration of 4 h was chosen to correspond to Snook and Ciriello (1991);
- horizontal distance (H) was estimated from box width (W) and vertical lift height (V) using the following equations:

$$H = 20 + W/2 \quad \text{for } V > 75 \text{ cm (30 inches)};$$
$$H = 25 + W/2 \quad \text{for } V < 75 \text{ cm (30 inches)}.$$

Basis for determining criterion-based weight limits

The University of Michigan 2D SSPP Program was used to determine biomechanically-based load weights that produce a disc compression of 350 kgs (3·4 kN) (i.e., the biomechanical criterion).

The University of Michigan Energy Expenditure Prediction Program was used to determine the physiologically-based load weights that produce energy expenditures equivalent to those displayed in table 3 for a lifting duration of 2–8 h. For example, where V is below 75 cm (tasks 1, 2, and 4), 3·1 kcal/min was used, where V is above 75 cm (task 3), 2·2 kcal/min was used.

[6] The 9·5 kcal/min baseline aerobic capacity value is equivalent to 90% of a 10·5 kcal/min baseline aerobic capacity for treadmill activity.

The psychophysically-based load weights for Tasks 1–3 were taken from Snook and Ciriello's (1991) female lifting database. The load weights are equivalent to the values that are acceptable to 75% of the female population for a 34 cm box width, 76 cm vertical displacement, and a lifting frequency of 4 lifts/min. For task 4, the load weight is taken from Ayoub *et al.* (1978) (table 8, p. 77, adjusted for 75% female acceptable).

D. Equations used to estimate energy expenditure from Garg (1976)

The following equations from Garg (1976) were used to estimate energy expenditure:

Stoop lift

$$E = 0{\cdot}0109\ BW + (0{\cdot}0012\ BW + 0{\cdot}0052\ L + 0{\cdot}0028\ S \times L)\,f \qquad (1)$$

Squat lift

$$E = 0{\cdot}0109\ BW + (0{\cdot}0019\ BW + 0{\cdot}0081\ L + 0{\cdot}0023\ S \times L)\,f \qquad (2)$$

Arm lift

$$E = 0{\cdot}0109\ BW + (0{\cdot}0002\ BW + 0{\cdot}0103\ L - 0{\cdot}0017\ S \times L)\,f \qquad (3)$$

where:

E = energy expenditure (kcal/min)
BW = body weight (lbs)
L = weight of the load (lbs)
S = sex (female = 0, male = 1)
f = frequency of lifting (lifts/min)

International Cooperating Organizations

NTIS has cooperating arrangements with organizations in many countries around the world. They provide NTIS clients fast and efficient contact with NTIS, taking orders for NTIS products, resolving order-related problems, accepting payment in local currency and processing orders through the local Custom's office.

ARGENTINA

Suministros Asociados S.A.
Mr. Daniel B. Koretzky
Belgrano 333, 1/34
1642 - San Isidro,
Buenos Aires, ARGENTINA

PHONE: 541 742-1466/70
FAX: 541 743-3974

AUSTRALIA

INFO-LINE
Overseas Document Delivery
235 Jones St., Broadway
N.S.W. 2007, AUSTRALIA

PHONE: 612 282-3052
FAX: 612 282-1640

CANADA

CISTI
National Research Council
Client Assistance
Document Delivery
Ottawa, CANADA K1A 0S2

PHONE: 613 993-9251
FAX: 613 952-8243

CHINA, PEOPLE'S REPUBLIC OF

Institute of Scientific & Technical Information of China (ISTIC)
Mr. Ge Songxue
P.O. Box 3827
15 Fu Xing Lu
Beijing 100038, CHINA

PHONE: 861 801-4020
FAX: 861 851-4025

ENGLAND

Microinfo Limited
P.O. Box 3
Omega Park
Alton, Hants GU34 2PG
ENGLAND

PHONE: 44 420-86848
FAX: 44 420-89889

FINLAND

Technical Research Centre of Finland
Information Service
P.O. Box 2000
Vuorimiehentie 5
FIN - 02044 VTT, FINLAND

PHONE: 3580 456-4370
FAX: 3580 456-4374

FRANCE

World Data
Mr. Boris Prassoloff
10 Rue Nicolas Flamel
75004 Paris, FRANCE

PHONE: 331 4278-0578
FAX: 331 4278-1472

GERMANY

FIZ Karlsruhe
Bibliographic Service
Postfach 2465
D-76012 Karlsruhe, GERMANY

PHONE: 49 7247 808-333
FAX: 49-7247 808-135

INDIA

Allied Publishers Ltd.
NTIS Division
751 Mount Road
Madras 600 002, INDIA

PHONE: 9144 826-3938, 826-3948
FAX: 9144 852-0649

Higginbothams Ltd.
NTIS Division
814 Anna Salai
Madras 600 002, INDIA

PHONE: 9144 852-1841/3
FAX: 9144 834-590

Informatics
NTIS Division
No. 87, 2nd Floor
11th Cross, Malleswaram
Bangalore 560 003, INDIA

PHONE: 9180 367-867
FAX: 9180 334-4598

ISRAEL

National Center of Scientific and Technological Info. (COSTI)
P.O. Box 43074
Atidim Scientific Park
Devorah-Haneviah St.
Tel Aviv 61430, ISRAEL

PHONE: 9723 492-040
FAX: 9723 492-033

ITALY

Diffusione Edizioni Anglo-Americane
Librerie Internazionale
28 Via Lima
00198 Rome, ITALY

PHONE: 396 855-1441
FAX: 396 854-3228

JAPAN

MRI Information Network Inc.
Harumi Park Bldg.
3-2-22, Harumi Chuo-Ku
Tokyo 104, JAPAN

PHONE: 813 3536-5849
FAX: 813 3536-5850

KOREA

Korea Institute of Industry and Technology Information
Information Resources Division
P.O. Box 205, Cheongryangri
Seoul, KOREA

PHONE: 822 962-6211/8
FAX: 822 962-4702

THE NETHERLANDS

Bibliotheek TU Delft
Mr. Reinder Jan Zwart
P.O. Box 98
2600 MG Delft
THE NETHERLANDS

PHONE: 3115 782-679
FAX: 3115 158-759

PORTUGAL

Consulplano SA
Mr. Joao Luis de Ayala Boaventura
Av. Frei Miguel Contreiras, 54-3
D-1700 Lisbon, PORTUGAL

PHONE: 3511 849-1187
FAX: 3511 849-6738

SPAIN

INFILE
Sr. Federico Peña
Don Ramon de la Cruz, 101- 4°B
28006 Madrid, SPAIN

PHONE: 341 402-3236, 254-6958
FAX: 341 402-4819

SWEDEN

Studsvik Library
Mr. Sten Wesslen
S-611-82 Nykoping, SWEDEN

PHONE: 46-155 221-000
FAX: 46-155 263-044

TAIWAN

National Science Council
Science and Technology Info. Center
P.O. Box 91-37
Taipei 10636, TAIWAN

PHONE: 8862 737-7649
FAX: 8862 737-7664

4/1/94

NTIS Order Form

U.S. DEPARTMENT OF COMMERCE
Technology Administration
National Technical Information Service
Springfield, VA 22161

(703) 487-4650
or FAX this form to (703) 321-8547
To verify receipt of your FAX order, call (703) 487-4679.

For Rush Service—Call 1-800-553-NTIS
Rush service is available for an additional fee.
To order subscriptions, call (703) 487-4630.
TDD (For hearing impaired only), call (703) 487-4639.

Ship to Address

Please PRINT or TYPE

Date _____

Company

Attention Title

Last Name First Initial

Suite or Room Number

Full Street Address Required

City State ZIP

( ) ( )
Telephone number Fax number

DTIC Users Code _____

Contract No. _____
Last six digits

Return Policy: Although NTIS cannot accept returns for credit or refund, we will gladly replace any item you requested if we made an error in filling your order, if the item was defective, or if you received it in a damaged condition. Just call our Customer Service Department at (703) 487-4660.

Payment

☐ Charge my NTIS Deposit Account _ _ _ _ _ _ - _

Charge my ☐ VISA ☐ MasterCard ☐ AMERICAN EXPRESS

Account No. _____

Exp. _____ Cardholder's name _____
(Please print)

Signature: _____
(Required to validate all orders)

☐ Check/Money order enclosed for $ _____
(Payable in U.S. dollars)

☐ Bill me * —**Add $7.50 per order if full payment does not accompany order.** Purchase orders accepted only from government agencies, educational institutions, or corporations in the U.S., Canada & Mexico.

Purchase Order No. _____

After the original stock of a technical report is exhausted, NTIS reprints directly from the master archive copy. These printed-to-order copies are the best possible reproductions.

International Shipping
Paper copy reports and microfiche copies are shipped surface mail unless Air Mail is requested

Air Mail Fees
Canada and Mexico add $4 per paper copy report; $1 per microfiche copy.
Other countries add $8 per paper copy report; $1.25 per microfiche copy.
Computer products are shipped by air courier as part of the regular handling fee.

Order Selection

Unless microfiche or other is specified, paper copy will be sent.

Please PRINT or TYPE

Enter NTIS order numbers (Ordering by title alone will delay your order)	Customer Routing[1] optional (up to 8 digits)	Unit Price	Quantity: Paper Copy	Quantity: Micro-fiche	Quantity: Other	Specify density for tape orders: 1600 bpi	6250 bpi	3480 cartridge	Internat'l Air Mail Fee (see above)	TOTAL PRICE
1.										
2.										
3.										
4.										
5.										
6.										
7.										
8.										

[1]NTIS will label each item with up to eight characters of your organization's routing code.

Value of Order	Handling Fee
$10.00 or less	$2.00
$10.01 – $50.00	$4.00
$50.01 – $100.00	$6.00
Over $100.00	$8.00
Add $2.00 to above for orders sent outside of the U.S., Canada, and Mexico.	

Total _____

Handling Fee *per order* (see chart at left) _____

Payment not included. Please bill me, add $7.50 (Available for U.S., Canada, and Mexico only) _____

GRAND TOTAL _____

7/94
All previous versions of this order form are obsolete.

Prices are subject to change.
The NTIS Sales Desk (703) 487-4650 can provide pricing verification.